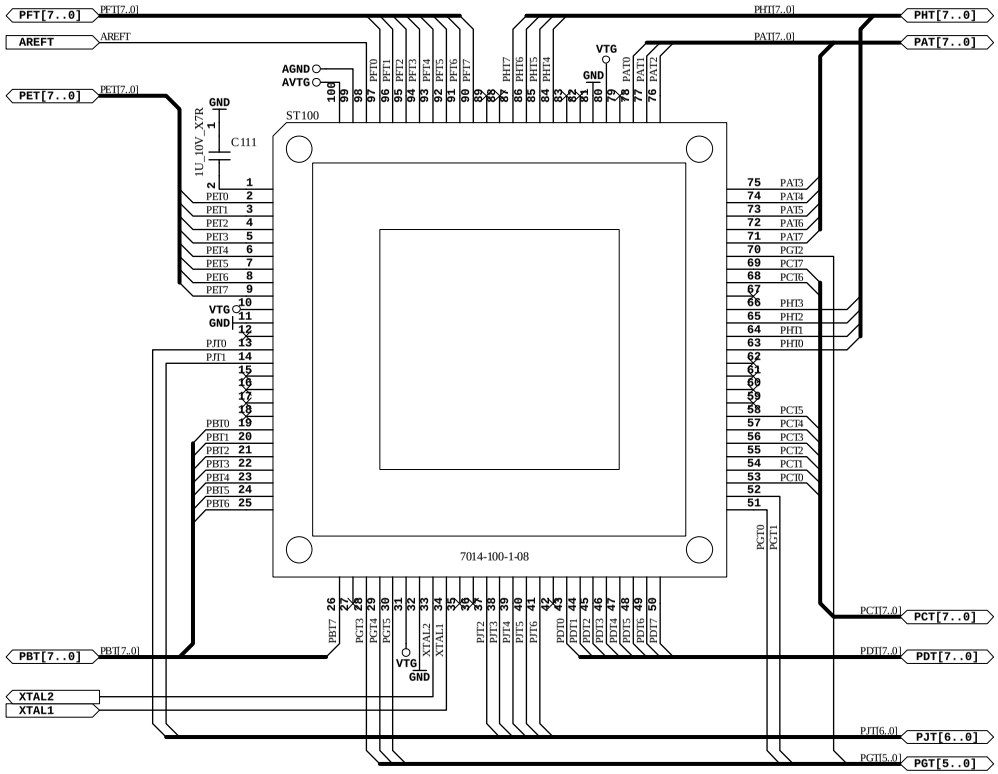

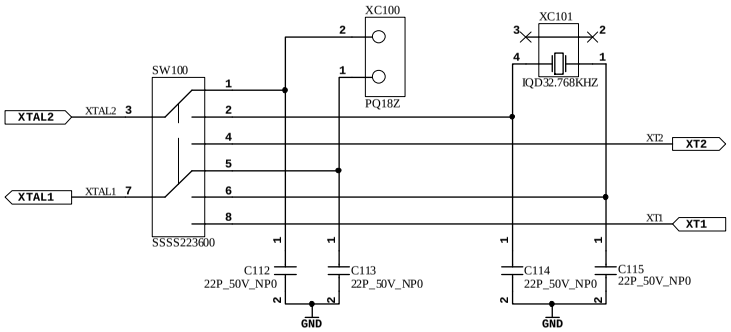

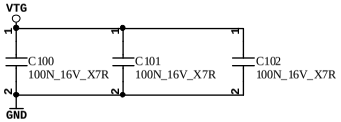

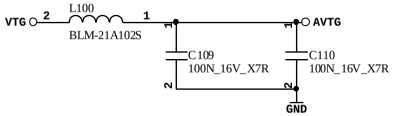

STK504 - MCU		Page 1 of 2
T0453-2001	Rev. C	14-Dec-2004
Copyright Atmel Corporation 2004		

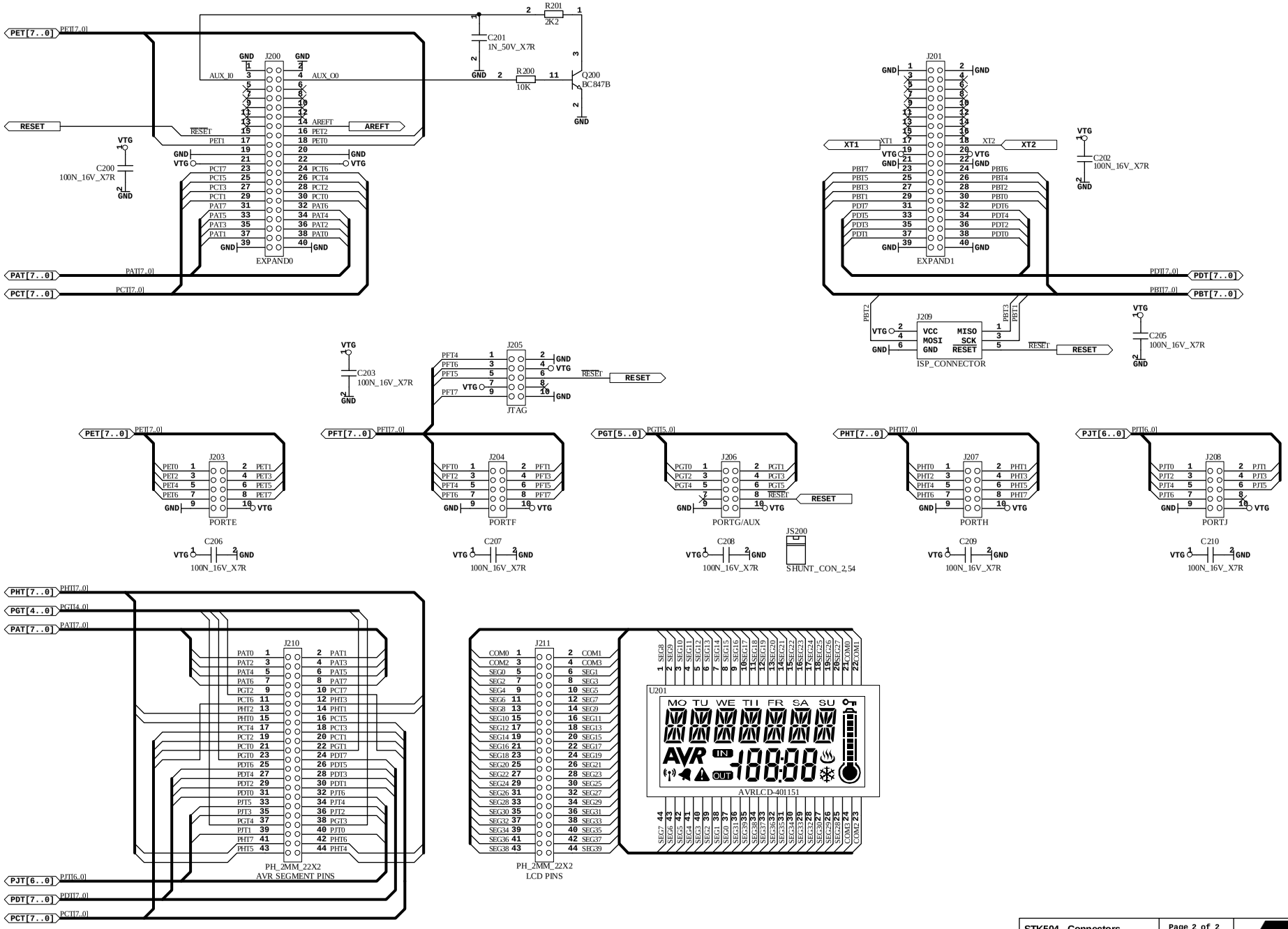

STK504 - Connectors		Page 2 of 2
T0453-2001	Rev. C	14-Dec-2004

Copyright Atmel Corporation 2004

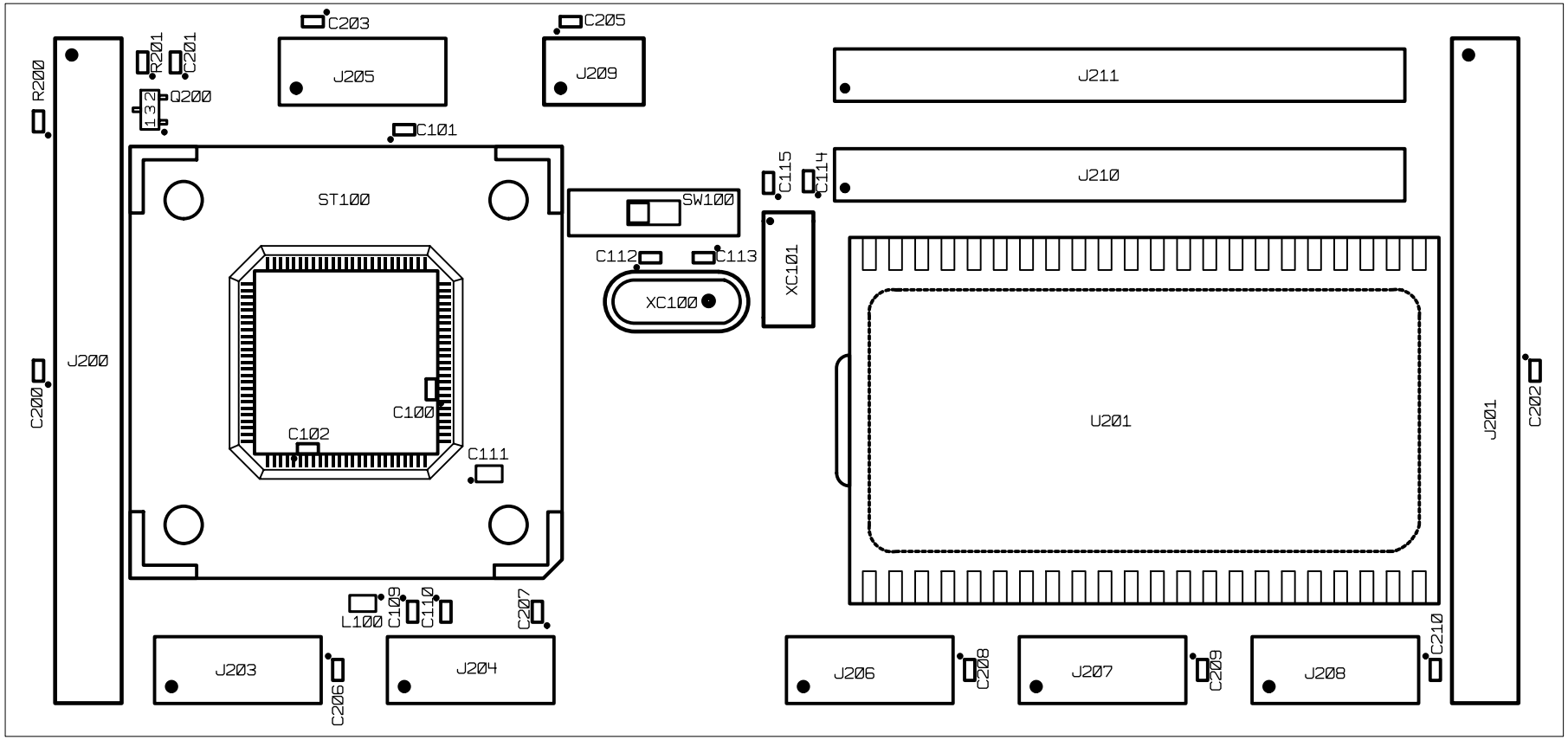
C203
C205
R201
C201
R200
Q200
J205
J209
J211
C101
J210
ST100
SW100
C115
C114
C112
C113
XC101
XC100
J200
C200
C100
C102
C111
U201
J201
C202
L100
C109
C110
C207
J203
J204
J206
J207
J208
C206
C208
C209
C210