Part Number: 0747500072
Status: Active
Overview: QSFP+_interconnect_solution
Description: QSFP+ Cage Assembly with SAN Heat Sink with Round EMI Gasket, Double Light Pipe, 2 Rear Legs, Press-Fit Pins

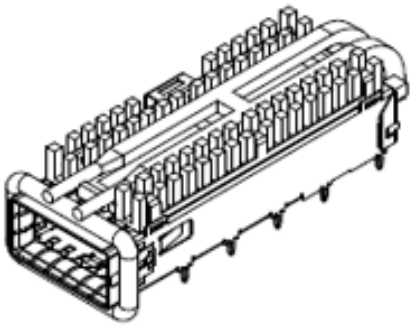

Series image - Reference only

Documents:
Drawing (PDF)
Product Specification 747500002-PS (PDF)
Packaging Specification PK-74750-0072 (PDF)
RoHS Certificate of Compliance (PDF)

General

Product Family	EMI Cages
Series	74750
Application	Module-to-Board
Component Type	Cage Assembly
Overview	QSFP+_interconnect_solution
Product Name	QSFP+
UPC	884982377837
Use With	74750 QSFP+ Cage Assembly

Physical

EMI Panel / Bezel Mount	Elastomer Gasket
Light Pipes per Port	2
Material - Metal	Copper Alloy
Net Weight	19.824/g
Orientation	Horizontal
Packaging Type	Tray
Port Configuration	1x1
Rear Legs	2
Termination Interface: Style	Through Hole - Compliant Pin
Thermal Height	SAN
Thermal Solutions	Pin Field

Material Info

Reference - Drawing Numbers

Packaging Specification	PK-74750-0072
Product Specification	747500002-PS
Sales Drawing	SD-74750-0002

EU ELV
Not Relevant

EU RoHS
Compliant

China RoHS

REACH SVHC
Not Contained Per - ED/21/2016 (20 June 2016)

Halogen-Free Status
Not Low-Halogen

Need more information on product environmental compliance?

Email productcompliance@molex.com
Please visit the Contact Us section for any non-product compliance questions.

CUST_NOTE	Contains part(s) with customer managed EHS data
China ROHS	Green Image
ELV	Not Relevant
RoHS Phthalates	Not Contained

Search Parts in this Series
74750 Series