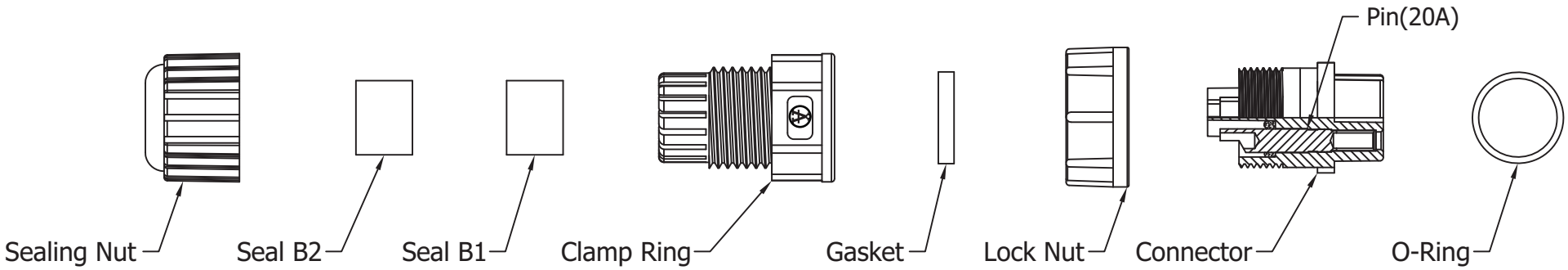

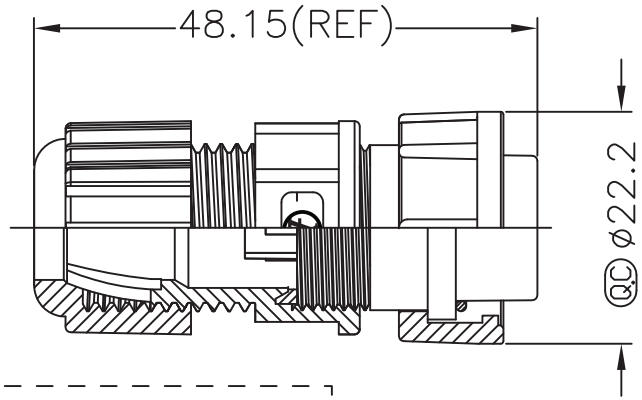

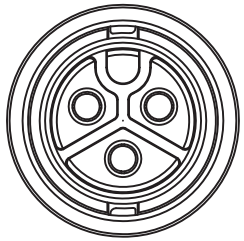

Connector

Material:

- Waterproof Rate: IP67
- Housing: Nylon+GF, Black
- Female Pin: Copper Alloy, Gold Plated
- O-Ring: Silicon, Gray
- Lock NutL Nylon_GF, Black
- Gasket: Silicon, Gray
- Clamp Ring: PPO, Black
- Sealing Nut: Nylon+GF, Black
- Seal B1 for cable: OD: Ø7.6MM~9.6MM
- Seal B2 for cable: OD: Ø4.0MM~7.6MM
- One set unassembled in one PE bag

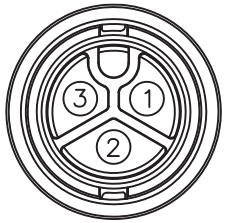

Pin Assignments
Front View

Unit: MM±0.25MM

Scale	1:1						Name	Item No. A-P03BFFA-LL7-1-R
TOLERANCE					Drawn	12.02.11	Chappell	
X.X	±0.40				Approved			Title Waterproof Power Connector Locking Assembly, 3 Pin Female, 20 Amps
X.XX	±0.25							
X.XXX	±0.15							Drawing No. rev00
Angle	±3°							
			Modification	Date	Name			Replace / Sheet

RoHS Complaint

ASSMANN WSW components