VNB35NV04 / VNP35NV04
VNV35NV04 / VNW35NV04

“OMNIFET II”:
FULLY AUTOPROTECTED POWER MOSFET

TYPE	$R_{DS(on)}$	I_{lim}	V_{clamp}
VNB35NV04 VNP35NV04 VNV35NV04 VNW35NV04	10 mΩ (*)	30 A	40 V

(*) For PowerSO-10 only

- LINEAR CURRENT LIMITATION
- THERMAL SHUT DOWN
- SHORT CIRCUIT PROTECTION
- INTEGRATED CLAMP
- LOW CURRENT DRAWN FROM INPUT PIN
- DIAGNOSTIC FEEDBACK THROUGH INPUT PIN
- ESD PROTECTION
- DIRECT ACCESS TO THE GATE OF THE POWER MOSFET (ANALOG DRIVING)
- COMPATIBLE WITH STANDARD POWER MOSFET

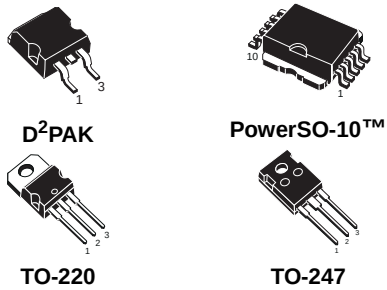

ORDER CODES:

D^2PAK	VNB35NV04
TO-220	VNP35NV04
PowerSO-10™	VNV35NV04
TO-247	VNW35NV04

DESCRIPTION

The VNB35NV04, VNP35NV04, VNV35NV04, VNW35NV04 are monolithic devices designed in STMicroelectronics VIPower M0-3 Technology, intended for replacement of standard Power MOSFETS from DC up to 25KHz applications. Built in thermal shutdown, linear current limitation and overvoltage clamp protect the chip in harsh environments. Fault feedback can be detected by monitoring the voltage at the input pin.

BLOCK DIAGRAM

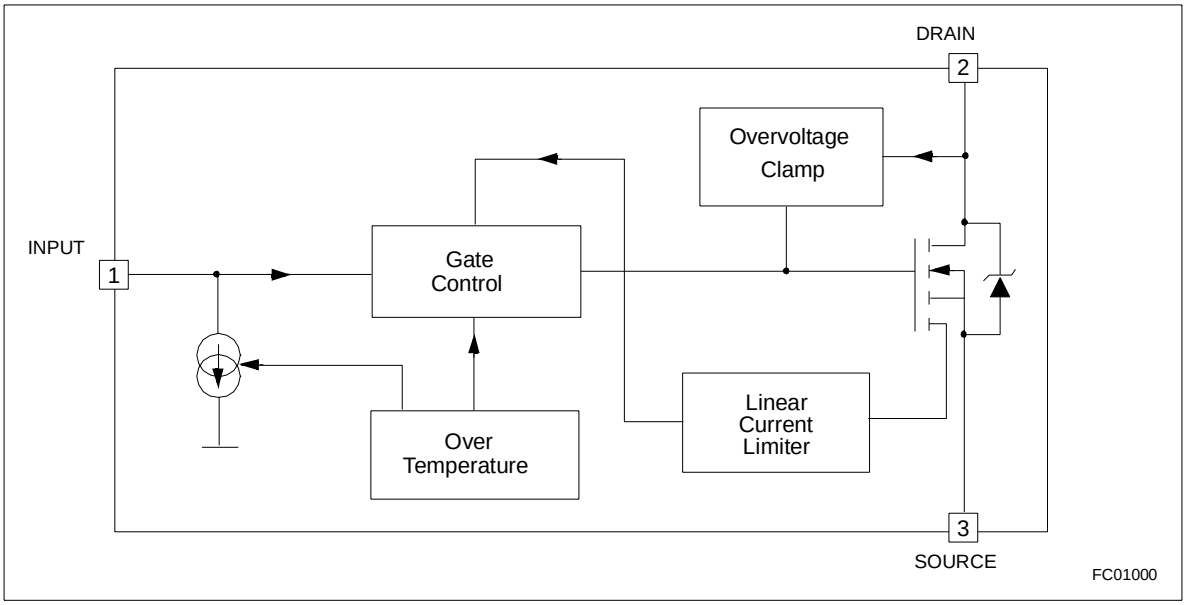

ABSOLUTE MAXIMUM RATING

Symbol	Parameter	Value				Unit
		PowerSO-10™	D^2PAK	TO-220	TO-247	
V_{DS}	Drain-source Voltage (V_{IN}=0V)	Internally Clamped				V
V_{IN}	Input Voltage	Internally Clamped				V
I_{IN}	Input Current	+/-20				mA
$R_{IN\ MIN}$	Minimum Input Series Impedance	4.7				Ω
I_D	Drain Current	Internally Limited				A
I_R	Reverse DC Output Current	-30				A
V_{ESD1}	Electrostatic Discharge (R=1.5KΩ, C=100pF)	4000				V
V_{ESD2}	Electrostatic Discharge on output pin only (R=330Ω, C=150pF)	16500				V
P_{tot}	Total Dissipation at T_c=25°C	125	125	125	208	W
T_j	Operating Junction Temperature	Internally limited				°C
T_c	Case Operating Temperature	Internally limited				°C
T_{stg}	Storage Temperature	-55 to 150				°C

CONNECTION DIAGRAM (TOP VIEW)

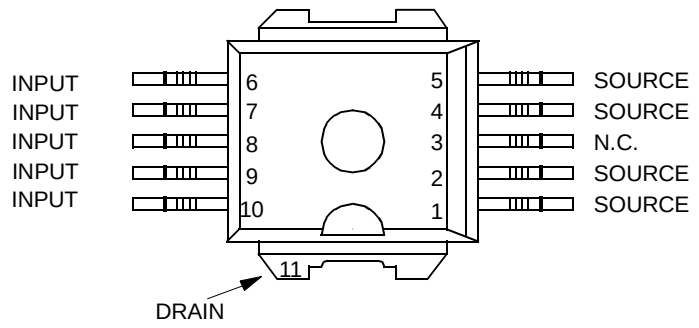

(*) For the pins configuration related to TO-220, TO-247, D^2PAK, see outlines at page 1.

CURRENT AND VOLTAGE CONVENTIONS

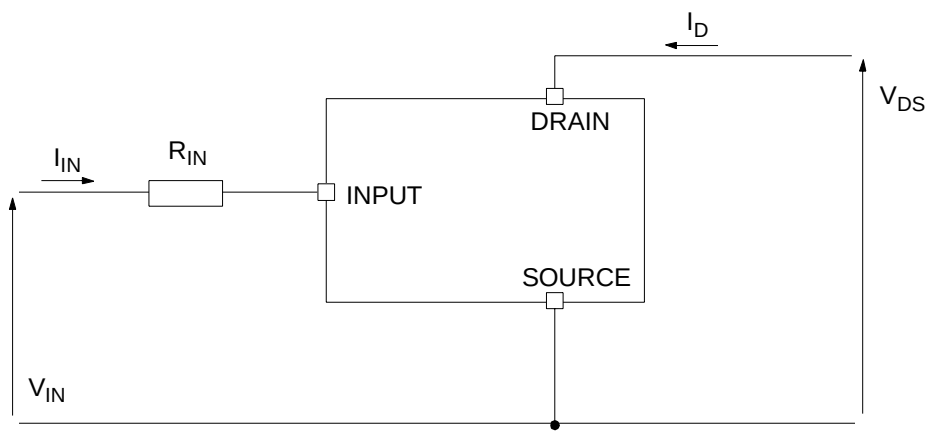

THERMAL DATA

Symbol	Parameter	Value				Unit
		PowerSO-10™	D2PAK	TO-220	TO-247	
$R_{thj-case}$	Thermal Resistance Junction-case MAX	1	1	1	0.6	°C/W
$R_{thj-amb}$	Thermal Resistance Junction-ambient MAX	50(*)	50(*)	50	30	°C/W

(*) When mounted on a standard single-sided FR4 board with 50mm^2 of Cu (at least 35 µm thick) connected to all DRAIN pins.

ELECTRICAL CHARACTERISTICS (-40°C < T_j < 150°C, unless otherwise specified)

OFF

Symbol	Parameter	Test Conditions	Min	Typ	Max	Unit
V_{CLAMP}	Drain-source Clamp Voltage	V_{IN}=0V; I_D=15A	40	45	55	V
V_{CLTH}	Drain-source Clamp Threshold Voltage	V_{IN}=0V; I_D=2mA	36			V
V_{INTH}	Input Threshold Voltage	V_{DS}=V_{IN}; I_D=1mA	0.5		2.5	V
I_{ISS}	Supply Current from Input Pin	V_{DS}=0V; V_{IN}=5V		100	150	µA
V_{INCL}	Input-Source Clamp Voltage	I_{IN}=1mA I_{IN}=-1mA	6 -1.0	6.8	8 -0.3	V
I_{DSS}	Zero Input Voltage Drain Current (V_{IN}=0V)	V_{DS}=13V; V_{IN}=0V; T_j=25°C V_{DS}=25V; V_{IN}=0V			30 75	µA

ON

Symbol	Parameter	Test Conditions	Max		Unit
			PowerSO-10	D^{2}PAK TO-220 / TO-247	
$R_{DS(on)}$	Static Drain-source On Resistance	V_{IN}=5V; I_D=15A; T_j=25°C V_{IN}=5V; I_D=15A; T_j=150°C	10 20	13 24	mΩ

ELECTRICAL CHARACTERISTICS (continued) (T_j=25°C, unless otherwise specified)

DYNAMIC

Symbol	Parameter	Test Conditions	Min	Typ	Max	Unit
g_{fs} (*)	Forward Transconductance	V_{DD}=13V; I_D=15A		35		S
C_{OSS}	Output Capacitance	V_{DS}=13V; f=1MHz; V_{IN}=0V		1300		pF

SWITCHING

Symbol	Parameter	Test Conditions	Min	Typ	Max	Unit
$t_{d(on)}$	Turn-on Delay Time	V_{DD}=15V; I_D=15A V_{gen}=5V; R_{gen}=$R_{IN\ MIN}$=4.7Ω (see figure 1)		150	500	ns
t_r	Rise Time			840	2500	ns
$t_{d(off)}$	Turn-off Delay Time			980	3000	ns
t_f	Fall Time			600	1500	ns
$t_{d(on)}$	Turn-on Delay Time	V_{DD}=15V; I_D=15A V_{gen}=5V; R_{gen}=2.2KΩ (see figure 1)		4	12	µs
t_r	Rise Time			27	100	µs
$t_{d(off)}$	Turn-off Delay Time			34	120	µs
t_f	Fall Time			31	110	µs
$(di/dt)_{on}$	Turn-on Current Slope	V_{DD}=15V; I_D=15A V_{gen}=5V; R_{gen}=$R_{IN\ MIN}$=4.7Ω		18		A/µs
Q_i	Total Input Charge	V_{DD}=12V; I_D=15A; V_{IN}=5V I_{gen} =2.13mA (see figure 5)		118		nC

SOURCE DRAIN DIODE

Symbol	Parameter	Test Conditions	Min	Typ	Max	Unit
V_{SD} (*)	Forward On Voltage	I_{SD}=15A; V_{IN}=0V		0.8		V
t_{rr}	Reverse Recovery Time	I_{SD}=15A; dI/dt=100A/µs V_{DD}=30V; L=200µH (see test circuit, figure 2)		400		ns
Q_{rr}	Reverse Recovery Charge			1.4		µC
I_{RRM}	Reverse Recovery Current			7		A

PROTECTIONS (-40°C < T_j < 150°C, unless otherwise specified)

Symbol	Parameter	Test Conditions	Min	Typ	Max	Unit
I_{lim}	Drain Current Limit	V_{IN}=6V; V_{DS}=13V	30	45	60	A
t_{dlim}	Step Response Current Limit	V_{IN}=6V; V_{DS}=13V		50		µs
T_{jsh}	Overtemperature Shutdown		150	175	200	°C
T_{jrs}	Overtemperature Reset		135			°C
I_{gf}	Fault Sink Current	V_{IN}=5V; V_{DS}=13V; T_j=T_{jsh}	10	15	20	mA
E_{as}	Single Pulse Avalanche Energy	starting T_j=25°C; V_{DD}=24V V_{IN}=5V; R_{gen}=$R_{IN\ MIN}$=4.7Ω; L=24mH (see figures 3 & 4)	1.7			J

(*) Pulsed: Pulse duration = 300µs, duty cycle 1.5%

PROTECTION FEATURES

During normal operation, the INPUT pin is electrically connected to the gate of the internal power MOSFET through a low impedance path.

The device then behaves like a standard power MOSFET and can be used as a switch from DC up to 25KHz. The only difference from the user's standpoint is that a small DC current I_{ISS} (typ. 100µA) flows into the INPUT pin in order to supply the internal circuitry.

The device integrates:

- OVERVOLTAGE CLAMP PROTECTION:

internally set at 45V, along with the rugged avalanche characteristics of the Power MOSFET stage give this device unrivalled ruggedness and energy handling capability. This feature is mainly important when driving inductive loads.

- LINEAR CURRENT LIMITER CIRCUIT:

limits the drain current I_D to I_{lim} whatever the INPUT pin voltages is. When the current limiter is active, the device operates in the linear region, so power dissipation may exceed the capability of the heatsink. Both case and junction temperatures increase, and if this phase lasts long enough, junction temperature may reach the overtemperature threshold T_{jsh}.

- OVERTEMPERATURE AND SHORT CIRCUIT PROTECTION:

these are based on sensing the chip temperature and are not dependent on the input voltage. The location of the sensing element on the chip in the power stage area ensures fast, accurate detection of the junction temperature. Overtemperature cutout occurs in the range 150 to 190 °C, a typical value being 170 °C. The device is automatically restarted when the chip temperature falls of about 15°C below shut-down temperature.

- STATUS FEEDBACK:

in the case of an overtemperature fault condition ($T_j > T_{jsh}$), the device tries to sink a diagnostic current I_{gf} through the INPUT pin in order to indicate fault condition. If driven from a low impedance source, this current may be used in order to warn the control circuit of a device shutdown. If the drive impedance is high enough so that the INPUT pin driver is not able to supply the current I_{gf}, the INPUT pin will fall to 0V. **This will not however affect the device operation: no requirement is put on the current capability of the INPUT pin driver except to be able to supply the normal operation drive current I_{ISS}.**

Additional features of this device are ESD protection according to the Human Body model and the ability to be driven from a TTL Logic circuit.

Fig.1: Switching Time Test Circuit for Resistive Load

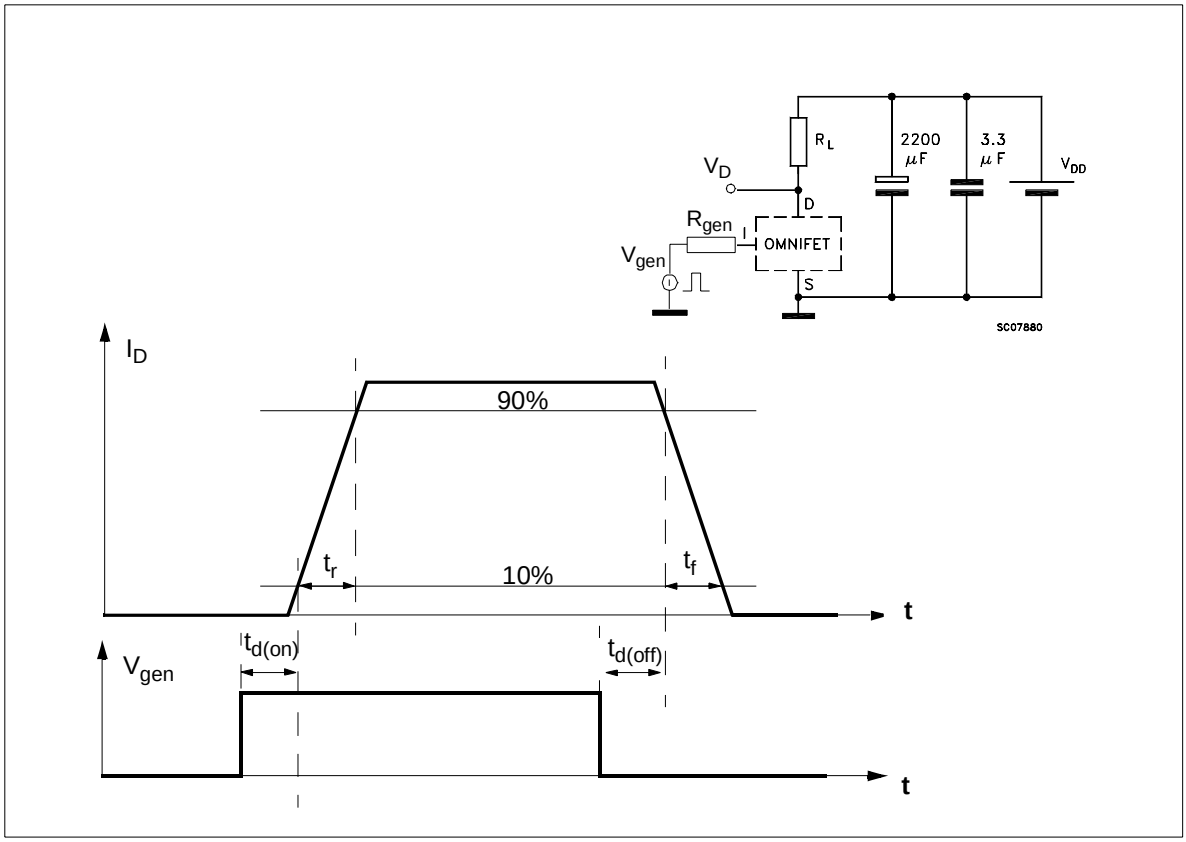

Fig.2: Test Circuit for Diode Recovery Times

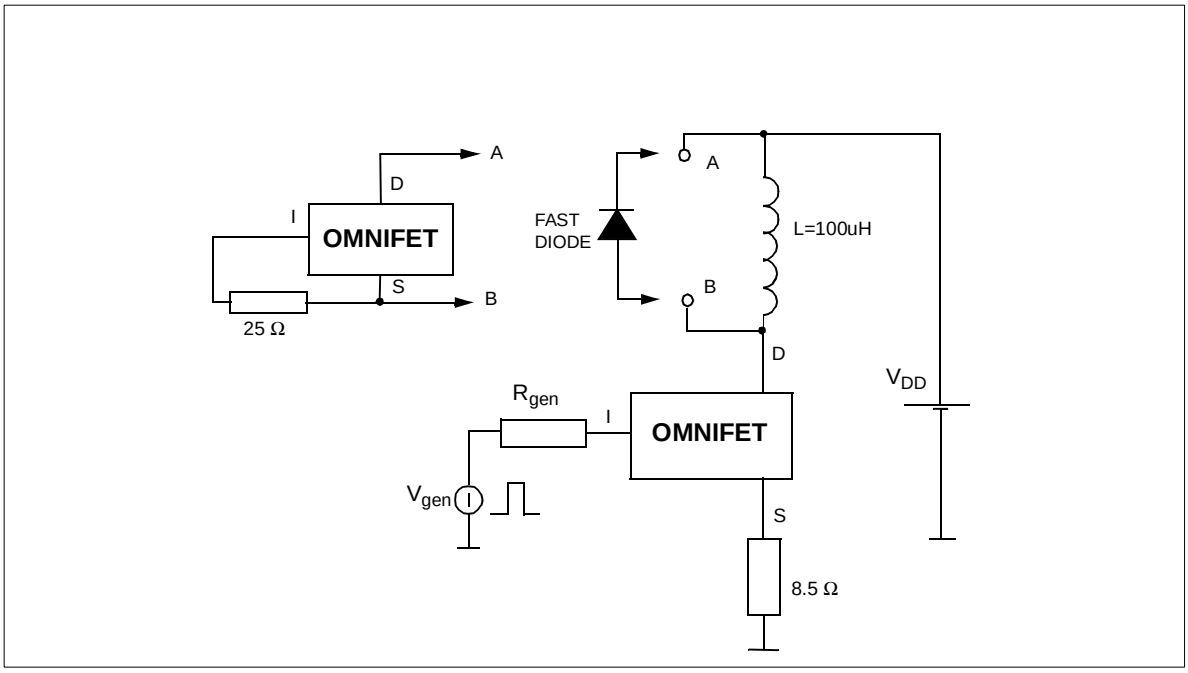

Fig. 3: Unclamped Inductive Load Test Circuits

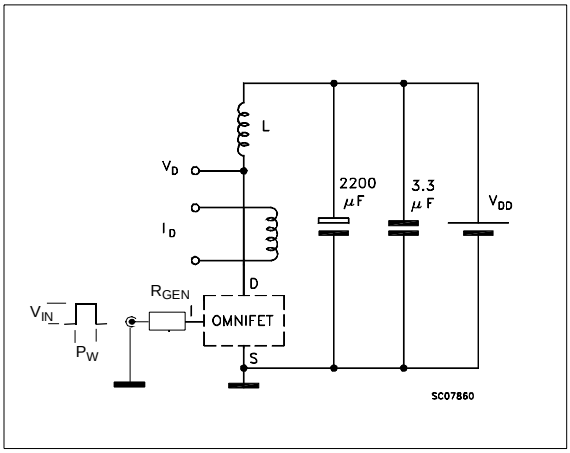

Fig. 4: Unclamped Inductive Waveforms

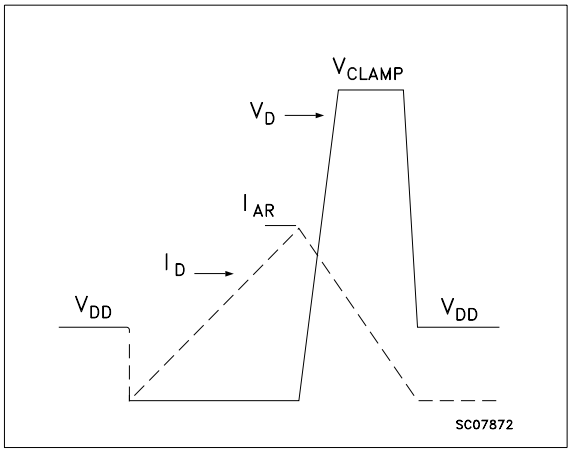

Fig. 5: Input Charge Test Circuit

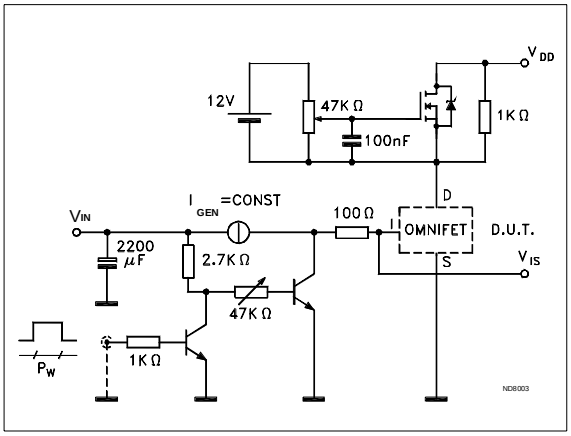

Fig 6 : Thermal Impedance for TO-220

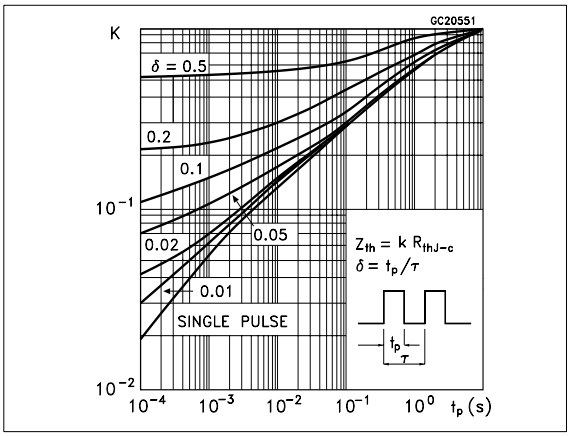

Fig. 7: Thermal Impedance for TO-247

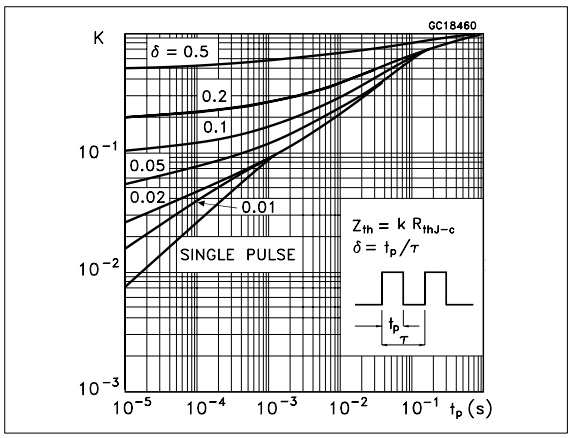

Source-Drain Diode Forward Characteristics

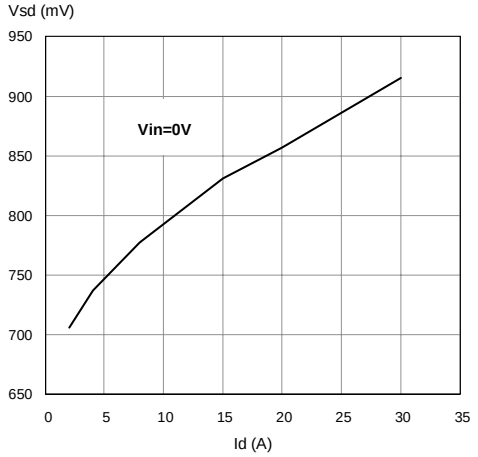

Static Drain Source On Resistance

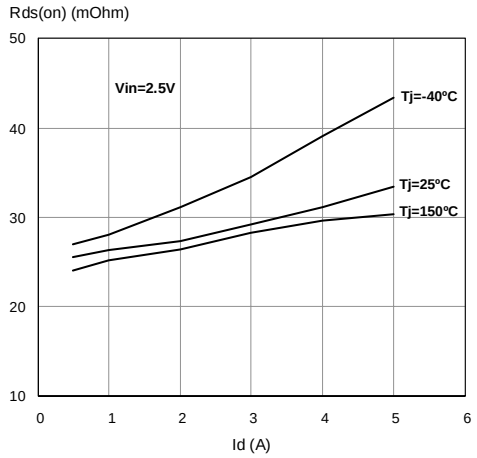

PowerSO-10 Static Drain-Source On resistance Vs. Input Voltage

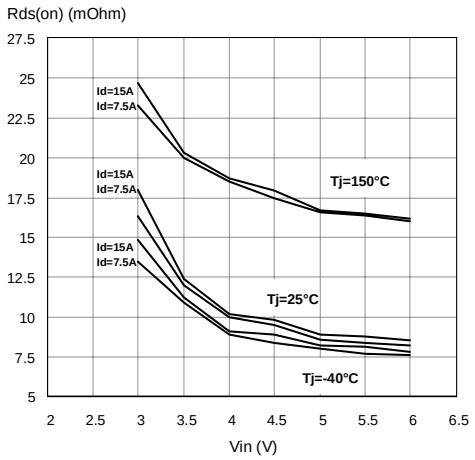

D2PAK, TO-220 & TO-247 Static Drain-Source On resistance Vs. Input Voltage

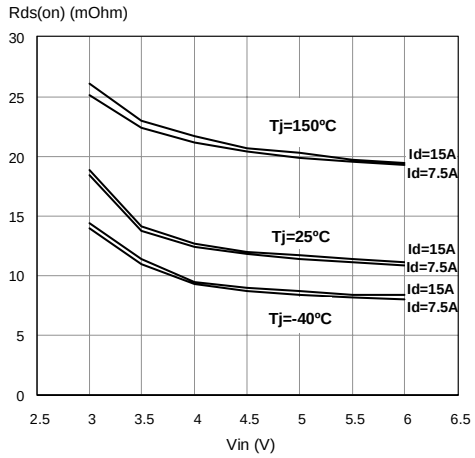

PowerSO-10 Static Drain-Source On Resistance Vs. Id

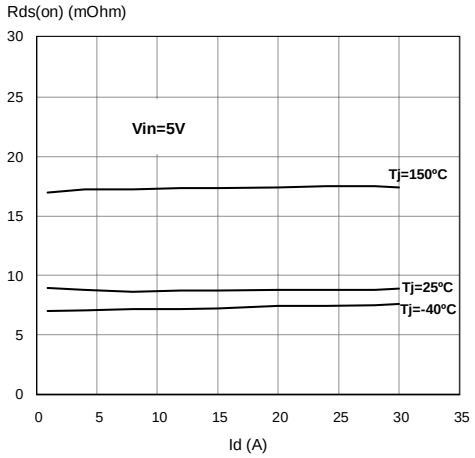

D2PAK, TO-220 & TO-247 Static Drain-Source On Resistance Vs. Id

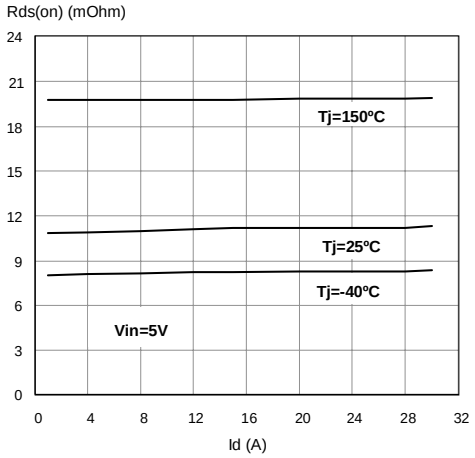

Transconductance

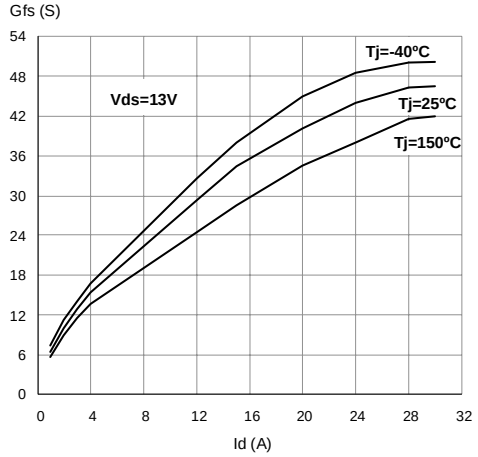

Transfer Characteristics

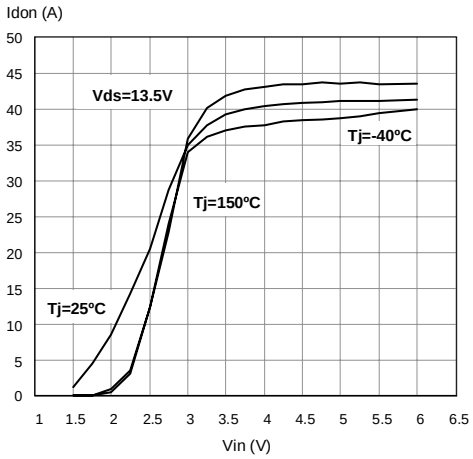

Output Characteristics

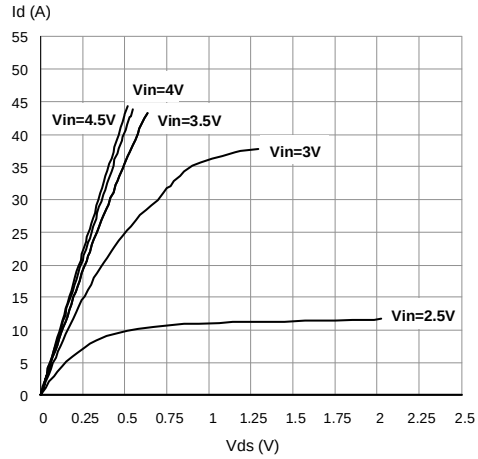

Normalized On Resistance Vs. Temperature

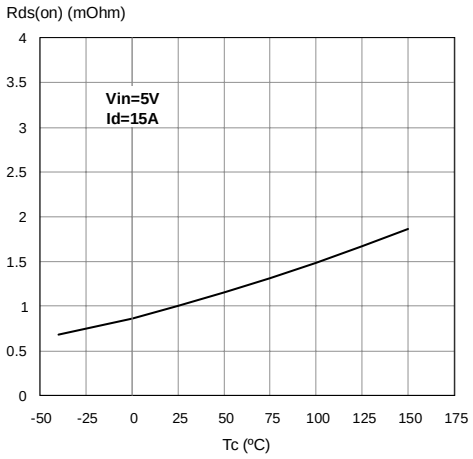

Turn On Current Slope

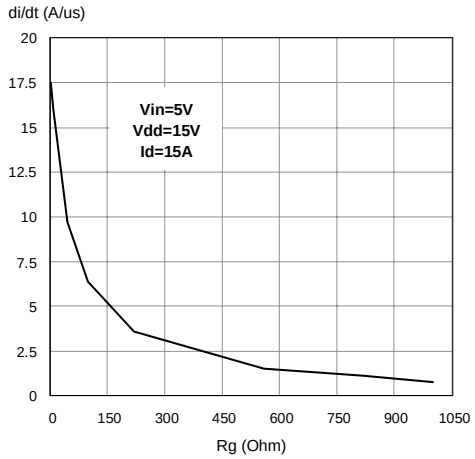

Turn On Current Slope

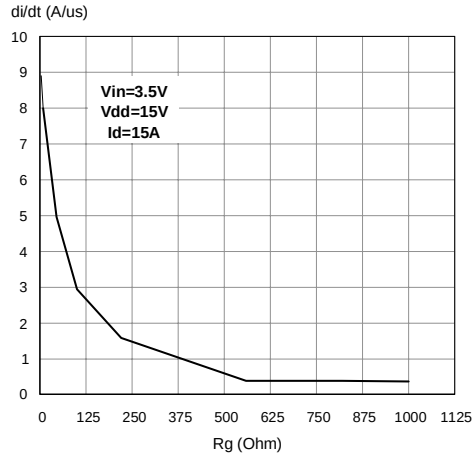

Input Voltage Vs. Input Charge

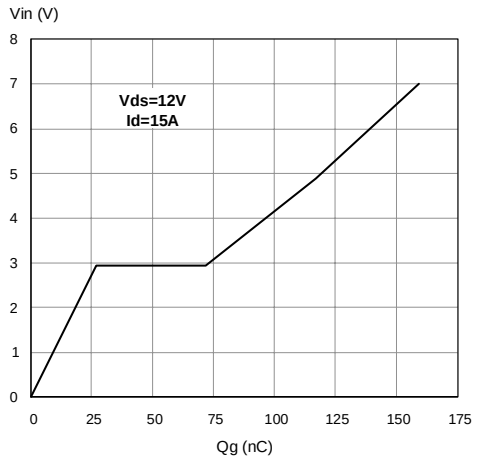

Turn off drain source voltage slope

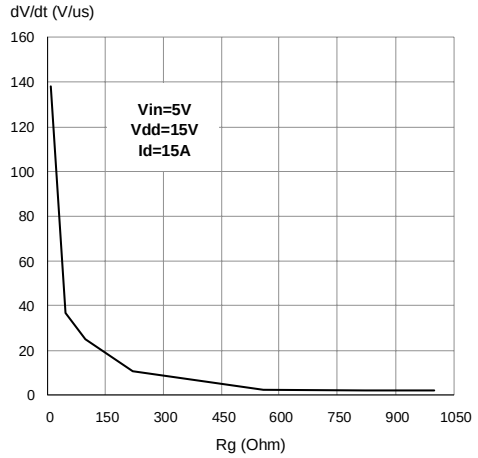

Turn Off Drain-Source Voltage Slope

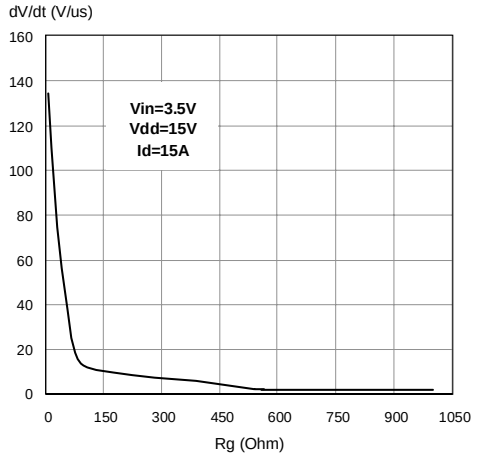

Switching Time Resistive Load

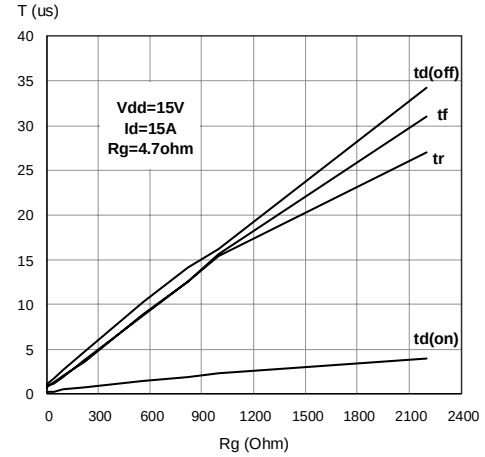

Switching Time Resistive Load

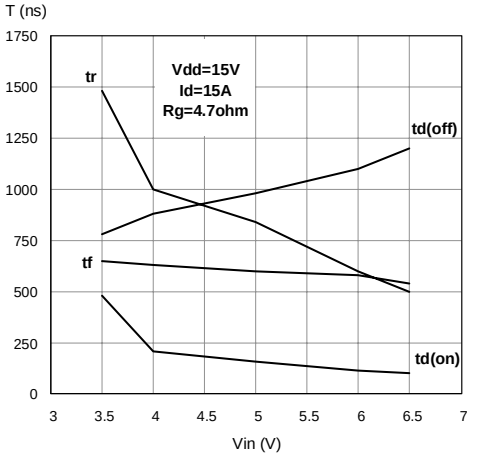

Normalized Input Threshold Voltage Vs. Temperature

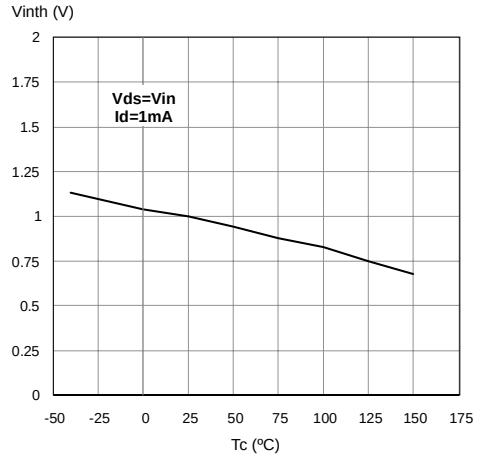

Current Limit Vs. Junction Temperature

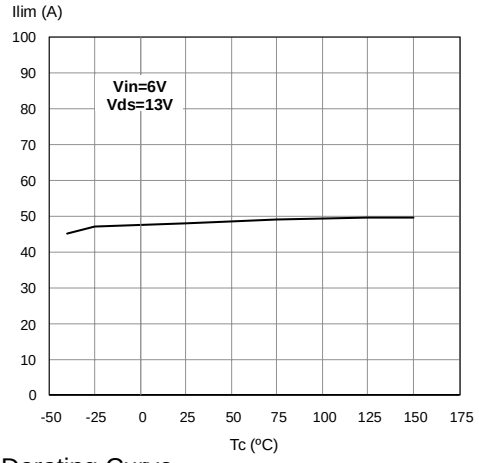

Step Response Current Limit

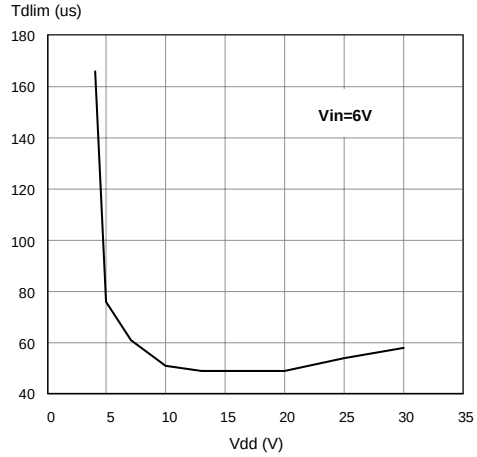

Derating Curve

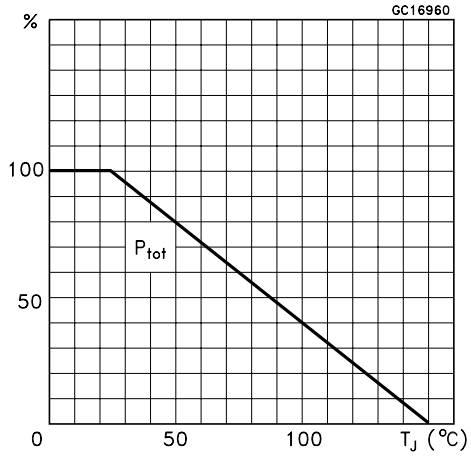

TO-220 MECHANICAL DATA

DIM.	mm.		
	MIN.	TYP	MAX.
A	4.40		4.60
b	0.61		0.88
b1	1.15		1.70
c	0.49		0.70
D	15.25		15.75
E	10		10.40
e	2.40		2.70
e1	4.95		5.15
F	1.23		1.32
H1	6.20		6.60
J1	2.40		2.72
L	13		14
L1	3.50		3.93
L20		16.40	
L30		28.90	
∅P	3.75		3.85
Q	2.65		2.95
Package Weight	1.9Gr. (Typ.)		

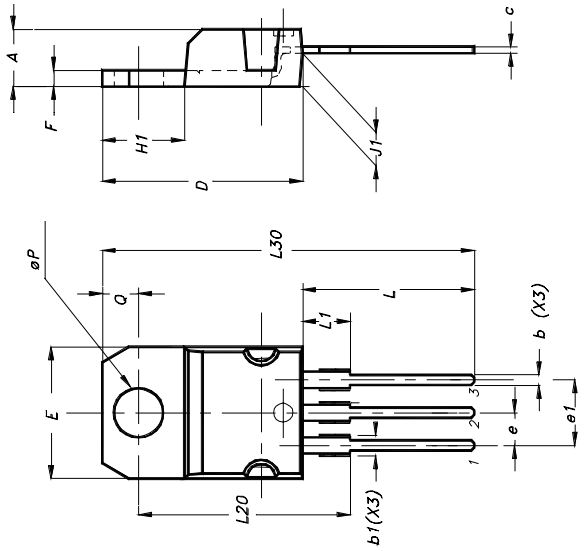

TO-247 MECHANICAL DATA

DIM.	mm.			inch		
	MIN.	TYP	MAX.	MIN.	TYP.	MAX.
A	4.7		5.3	0.185		0.209
D	2.2		2.6	0.087		0.102
E	0.4		0.8	0.016		0.031
F	1		1.4	0.039		0.055
F3	2		2.4	0.079		0.094
F4	3		3.4	0.118		0.134
G		10.9			0.429	
H	15.3		15.9	0.602		0.626
L	19.7		20.3	0.776		0.779
L3	14.2		14.8	0.559		0.582
L4		34.6			1.362	
L5		5.5			0.217	
M	2		3	0.079		0.118
Dia.	3.55		3.65	0.140		0.144

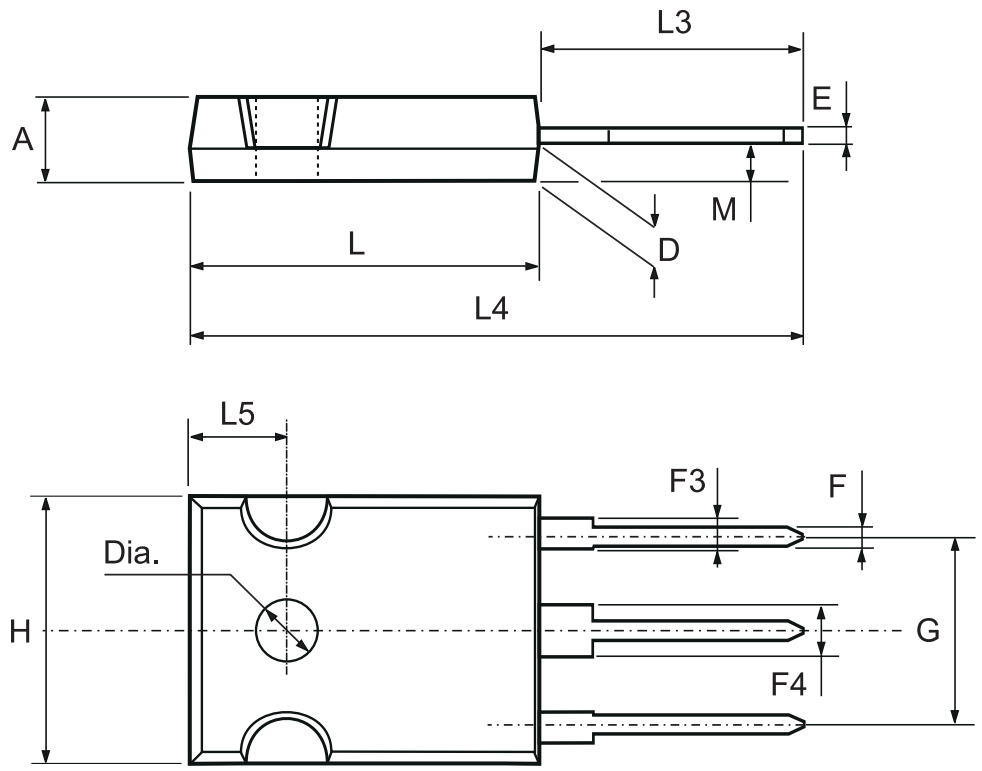

PowerSO-10™ MECHANICAL DATA

DIM.	mm.			inch		
	MIN.	TYP	MAX.	MIN.	TYP.	MAX.
A	3.35		3.65	0.132		0.144
A (*)	3.4		3.6	0.134		0.142
A1	0.00		0.10	0.000		0.004
B	0.40		0.60	0.016		0.024
B (*)	0.37		0.53	0.014		0.021
C	0.35		0.55	0.013		0.022
C (*)	0.23		0.32	0.009		0.0126
D	9.40		9.60	0.370		0.378
D1	7.40		7.60	0.291		0.300
E	9.30		9.50	0.366		0.374
E2	7.20		7.60	0.283		300
E2 (*)	7.30		7.50	0.287		0.295
E4	5.90		6.10	0.232		0.240
E4 (*)	5.90		6.30	0.232		0.248
e		1.27			0.050	
F	1.25		1.35	0.049		0.053
F (*)	1.20		1.40	0.047		0.055
H	13.80		14.40	0.543		0.567
H (*)	13.85		14.35	0.545		0.565
h		0.50			0.002	
L	1.20		1.80	0.047		0.070
L (*)	0.80		1.10	0.031		0.043
α	0º		8º	0º		8º
α (*)	2º		8º	2º		8º

(*) Muar only POA P013P

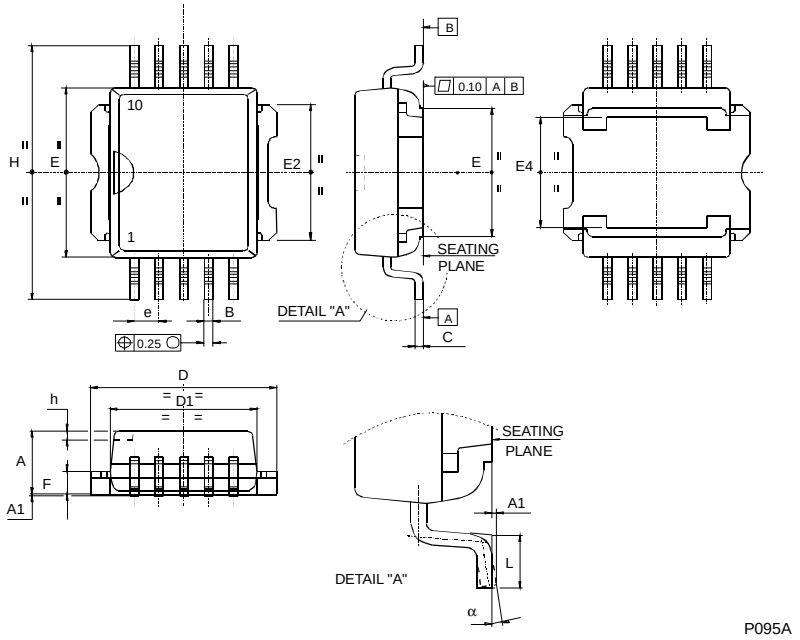

D^2PAK MECHANICAL DATA

DIM.	mm.		
	MIN.	TYP	MAX.
A	4.4		4.6
A1	2.49		2.69
A2	0.03		0.23
B	0.7		0.93
B2	1.14		1.7
C	0.45		0.6
C2	1.23		1.36
D	8.95		9.35
D1		8	
E	10		10.4
E1		8.5	
G	4.88		5.28
L	15		15.85
L2	1.27		1.4
L3	1.4		1.75
M	2.4		3.2
R		0.4	
V2	0º		8º

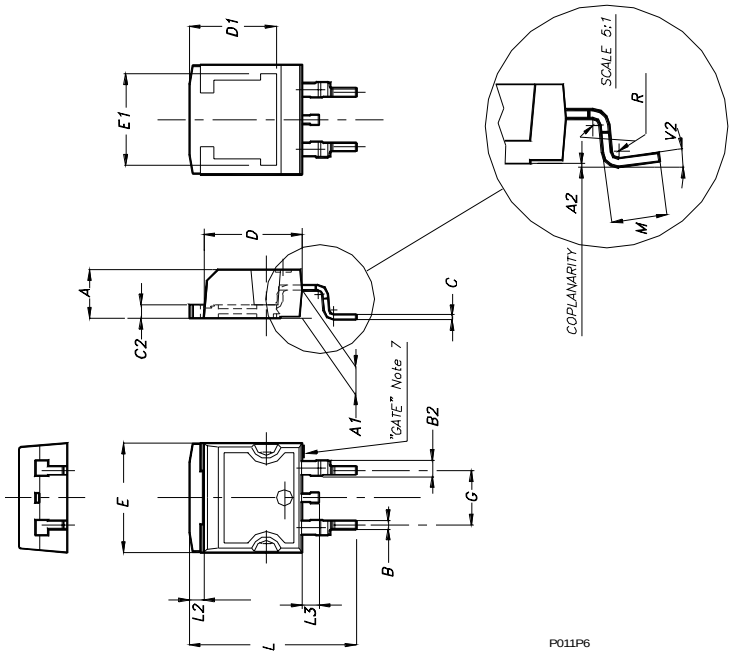

TO-220 TUBE SHIPMENT (no suffix)

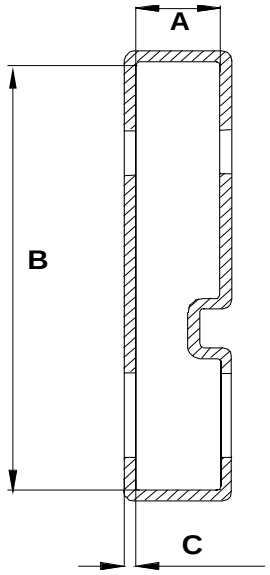

Base Q.ty	50
Bulk Q.ty	1000
Tube length (± 0.5)	532
A	5.5
B	31.4
C (± 0.1)	0.75

All dimensions are in mm.

PowerSO-10™ SUGGESTED PAD LAYOUT

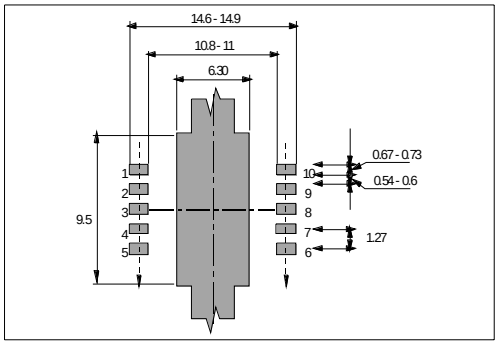

TUBE SHIPMENT (no suffix)

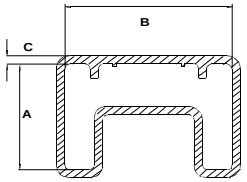

CASABLANCA

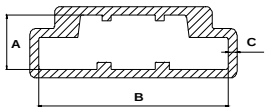

MUAR

All dimensions are in mm.

	Base Q.ty	Bulk Q.ty	Tube length (± 0.5)	A	B	C (± 0.1)
Casablanca	50	1000	532	10.4	16.4	0.8
Muar	50	1000	532	4.9	17.2	0.8

TAPE AND REEL SHIPMENT (suffix "13TR")

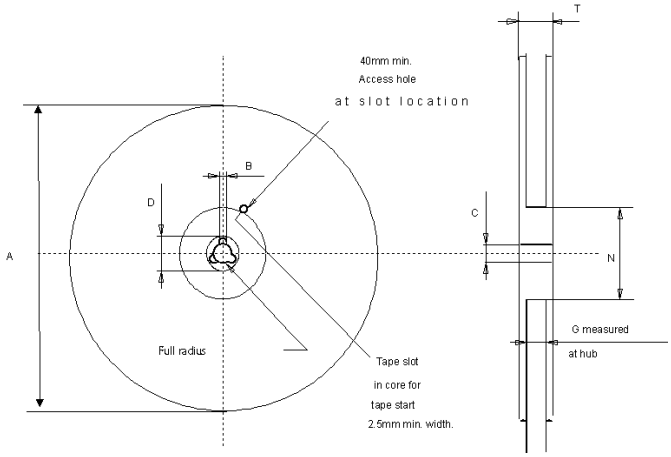

REEL DIMENSIONS

Base Q.ty	600
Bulk Q.ty	600
A (max)	330
B (min)	1.5
C (± 0.2)	13
F	20.2
G (+ 2 / -0)	24.4
N (min)	60
T (max)	30.4

All dimensions are in mm.

TAPE DIMENSIONS

According to Electronic Industries Association (EIA) Standard 481 rev. A, Feb 1986

Tape width	**W**	24
Tape Hole Spacing	**P0 (± 0.1)**	4
Component Spacing	**P**	24
Hole Diameter	**D (± 0.1/-0)**	1.5
Hole Diameter	**D1 (min)**	1.5
Hole Position	**F (± 0.05)**	11.5
Compartment Depth	**K (max)**	6.5
Hole Spacing	**P1 (± 0.1)**	2

All dimensions are in mm.

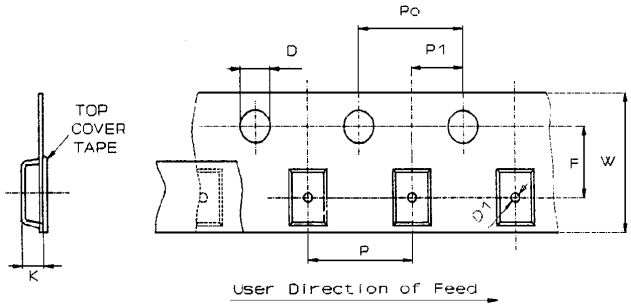

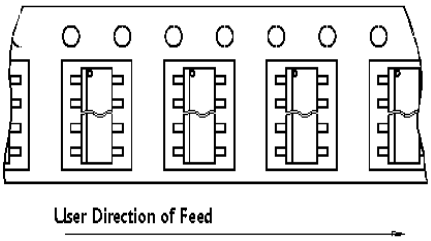

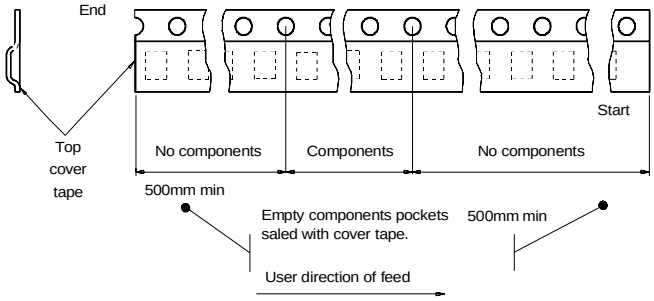

D²PAK FOOTPRINT

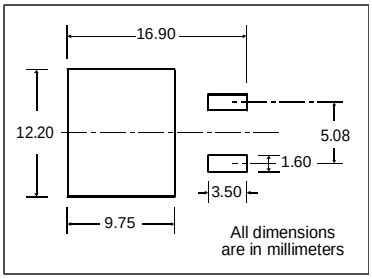

TUBE SHIPMENT (no suffix)

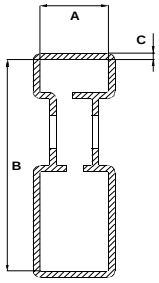

Base Q.ty	50
Bulk Q.ty	500
Tube length (± 0.5)	532
A	6
B	21.3
C (± 0.1)	0.6

All dimensions are in mm.

TAPE AND REEL SHIPMENT (suffix "13TR")

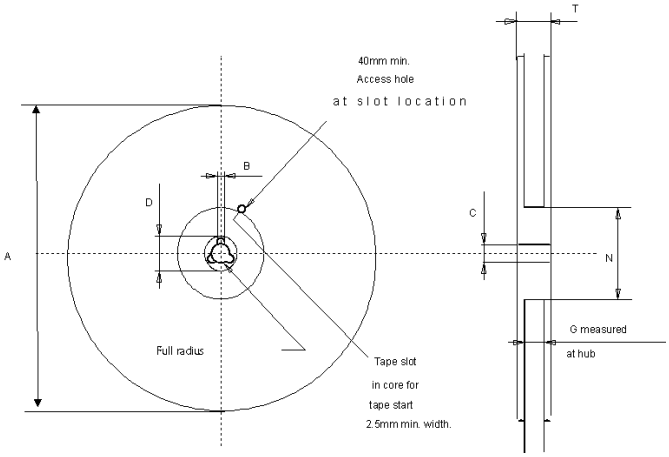

REEL DIMENSIONS

Base Q.ty	1000
Bulk Q.ty	1000
A (max)	330
B (min)	1.5
C (± 0.2)	13
F	20.2
G (+ 2 / -0)	24.4
N (min)	60
T (max)	30.4

All dimensions are in mm.

TAPE DIMENSIONS

According to Electronic Industries Association (EIA) Standard 481 rev. A, Feb 1986

Tape width	**W**	24
Tape Hole Spacing	**P0 (± 0.1)**	4
Component Spacing	**P**	16
Hole Diameter	**D (± 0.1/-0)**	1.5
Hole Diameter	**D1 (min)**	1.5
Hole Position	**F (± 0.05)**	11.5
Compartment Depth	**K (max)**	6.5
Hole Spacing	**P1 (± 0.1)**	2

All dimensions are in mm.

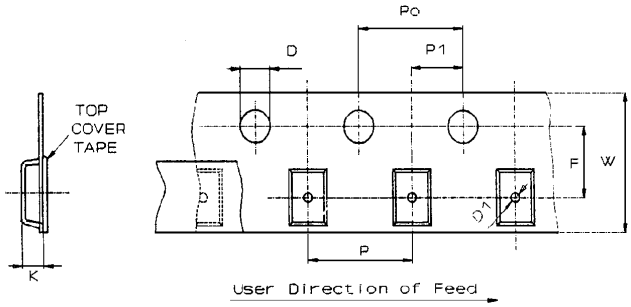

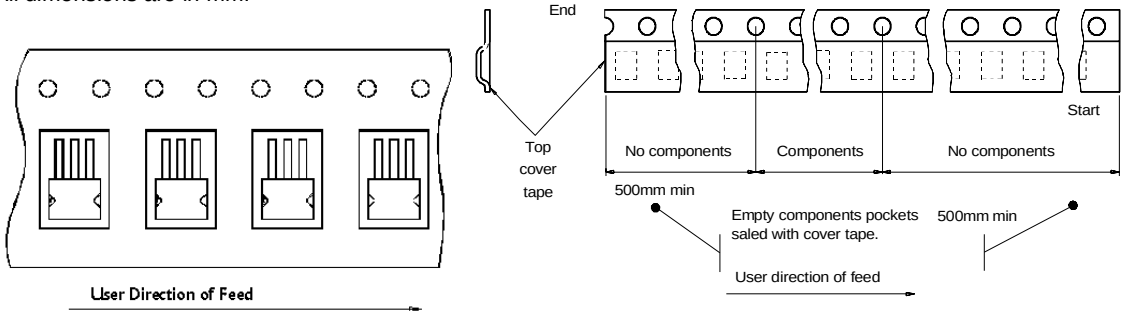

Information furnished is believed to be accurate and reliable. However, STMicroelectronics assumes no responsibility for the consequences of use of such information nor for any infringement of patents or other rights of third parties which may results from its use. No license is granted by implication or otherwise under any patent or patent rights of STMicroelectronics. Specifications mentioned in this publication are subject to change without notice. This publication supersedes and replaces all information previously supplied. STMicroelectronics products are not authorized for use as critical components in life support devices or systems without express written approval of STMicroelectronics.
The ST logo is a trademark of STMicroelectronics

© 2004 STMicroelectronics - Printed in ITALY- All Rights Reserved.

STMicroelectronics GROUP OF COMPANIES
Australia - Brazil - China - Finland - France - Germany - Hong Kong - India - Italy - Japan - Malaysia - Malta - Morocco - Singapore - Spain - Sweden - Switzerland - United Kingdom - U.S.A.

http://www.st.com