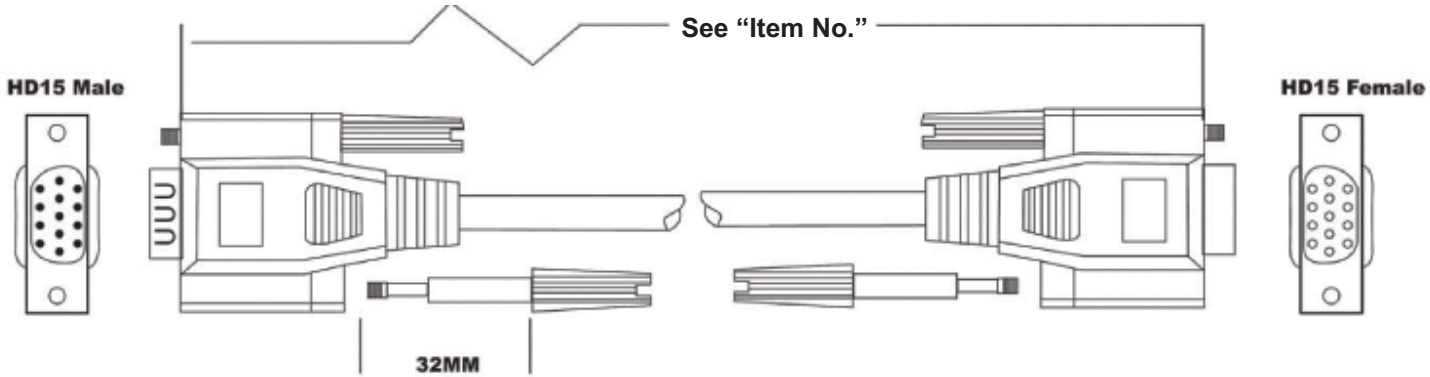

Configuration:

HD15M		HD15F
1	———	1
2	———	2
3	———	3
4	———	4
5	———	5
6	———	6
7	———	7
8	———	8
10	———	10
11	———	11
12	———	12
13	———	13
14	———	14
15	———	15
Shield	———	Shield

Material:

1.Cable: #28 14C+1+AL/MY (Beige PVC Jacket) O.D:6.0MM
2. Both connectors with normal type
HD15 Male the 9th PIN is empty
3.Thumbscrew: #4-40UNC Type
4.Allover Molded with Beige PVC

Notes:

1.Total Length: **See "Item No."**
2.Color: Beige
3.Molded Type

RoHS Complaint

Scale	1:1							Name
TOLERANCE						Drawn	11.16.11	Chappell
X.X	±0.40					Approved		
X.XX	±0.25							
X.XXX	±0.15							
Angle	±3°							
			Modification	Date	Name			

ASSMANN WSW components

Item No. **AK322-2-R (2.0 Meters)**
AK373-3-R (3.0 Meters)
AK375-R (10.0 Meters)

Title VGA Moniter Extension Cable, HD D-Sub 15 Pin Female to HD D-Sub 15 Pin Female

Drawing No. **rev00**

Replace | Sheet