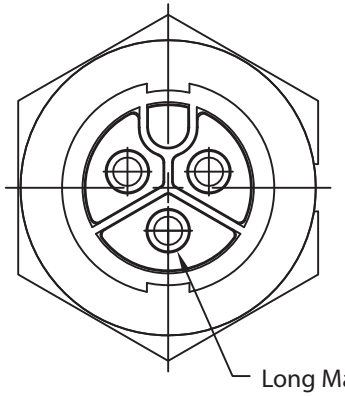

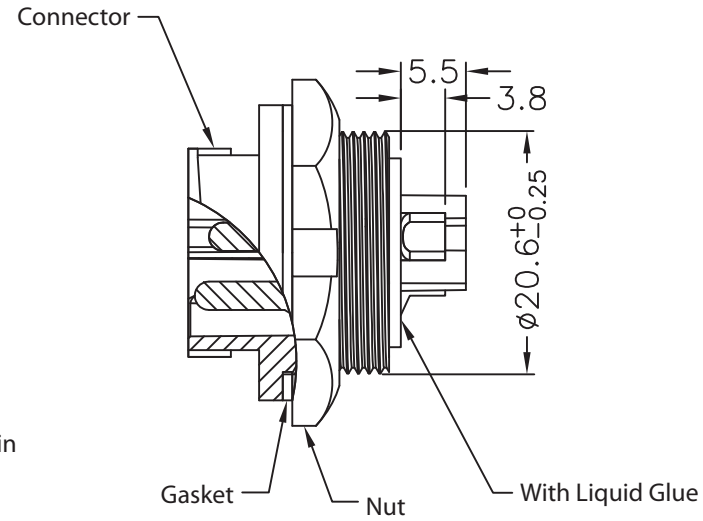

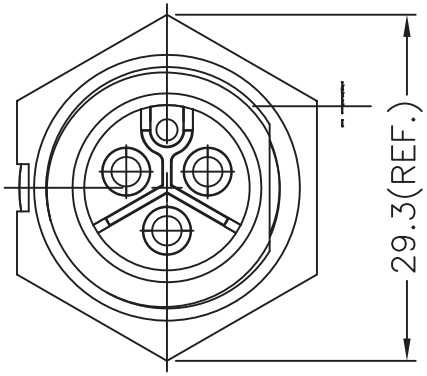

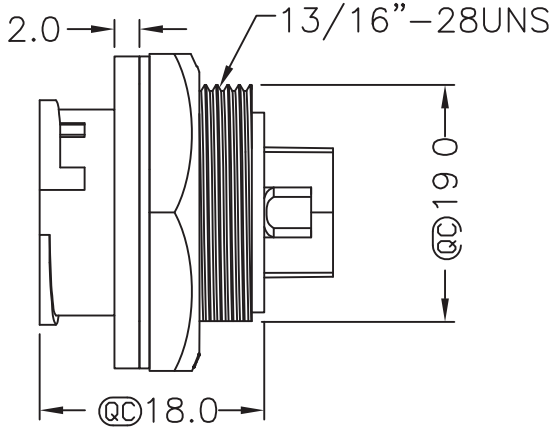

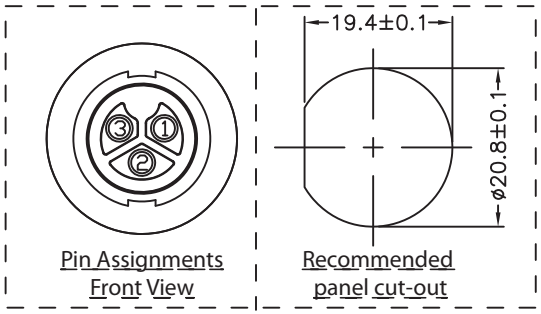

Material:

- Waterproof Rate: IP67
- Connector: Nylon+GF, Black
- Male Pin: Copper Alloy, Gold Plated
- Nut: Nylon+GF, Black
- Gasket: Silicon, Gray
- Maximum Panel Thickness: 4.5MM
- UL94V-0 Materials Used
- For UL2238 Certificated E318730

Unit: MM±0.25MM

RoHS Complaint

Scale	1:1
TOLERANCE	
X.X	±0.40
X.XX	±0.25
X.XXX	±0.15
Angle	±3°

Modification	Date	Name

		Name
Drawn	12.01.11	Chappell
Approved		

ASSMANN WSW components

Item No. **A-P03RMMS-LC7-2-R**

Title Waterproof Power Connector Panel Lock, 3 Pin Male, 20 Amps

Drawing No. **rev00**

Replace | Sheet