REVISION V

DO NOT SCALE FROM THIS PRINT

BSH-XXX-01-X-D-XX-XX

No OF POSITIONS
-030, -050, -060, -090,
**-120, **-150, *-180
(PER ROW)
**= SEE NOTE 10

LEAD STYLE
-01: .1280 [3.25]

PLATING SPECIFICATION
-F: FLASH SELECTIVE GOLD WITH MATTE TIN TAILS (SEE NOTES 7, 9 & 12)
-L: LIGHT SELECTIVE GOLD WITH MATTE TIN TAILS (SEE NOTE 9 & 12)
-H: HEAVY GOLD WITH FLASH GOLD TAILS (SEE NOTE 9 &12)
-C: ELECTRO-POLISHED SELECTIVE (SEE NOTE 9 &12)

ROW SPECIFICATION
-D: DOUBLE (USE BSH-XXX-01-D)

OPTION
-A: ALIGNMENT PINS (USE BSH-XXX-01-D-A)
-LC: LOCKING CLIPS (USE LC-08-TM-01)

OPTION
-TR: TAPE & REEL (120 POSITION MAX)

* = NOT RELEASED FOR PRODUCTION

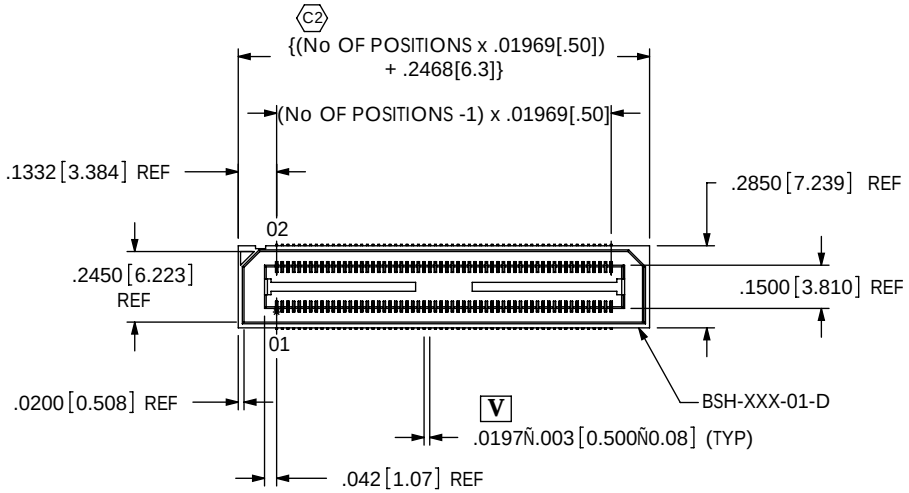

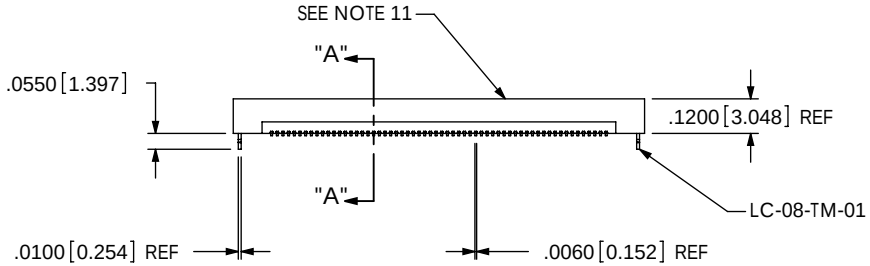

-LC: LOCKING CLIP OPTION SHOWN

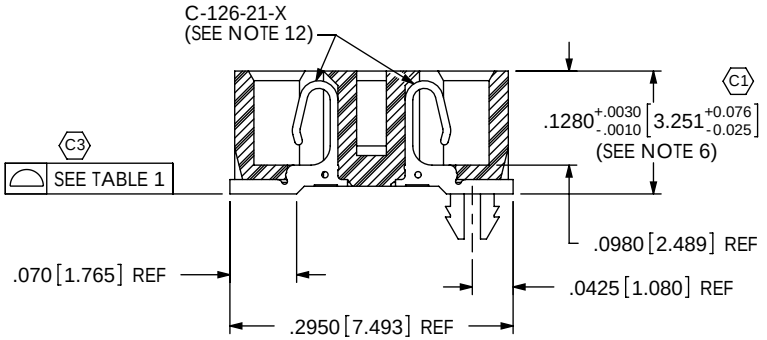

SECTION "A"-"A"
SCALE 5 : 1

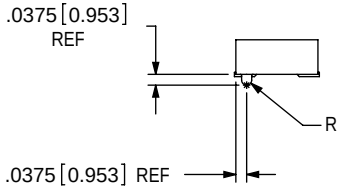

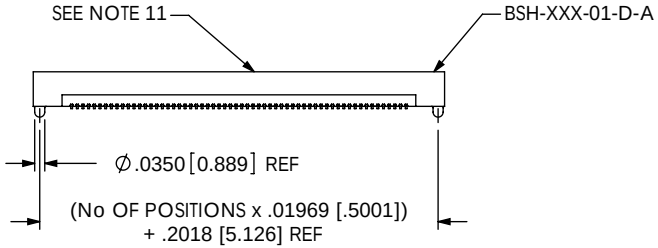

-A: ALIGNMENT PIN OPTION SHOWN

NOTES:

1. Ⓒ REPRESENTS A CRITICAL DIMENSION.
2. NOTE DELETED.
3. BURR ALLOWANCE: .0015 [.038] MAX.
4. MINIMUM PUSHOUT FORCE: 6 OZ.
5. MAXIMUM ALLOWABLE BOW: .002 [.051] INCH/INCH AFTER ASSEMBLY.
6. MAX VARIENCE OF .002 [.051]
7. -L PLATING CAN BE SUBSTITUDED FOR -F PLATING.
8. ASP-65067-01 IS A BSH-050-01-L-D-A. WITH OR WITHOUT -TR.
9. MAY SUBSTITUTE C-126-01-X FOR C-126-21-X.
10. FOR NEWAPPLICATIONS REQUIRING THESE POSITIONS, PLEASE CONTACT SAMTEC INTERCONNECT PROCESSING GROUP.
11. SIDE WALLS MAY BE RIBBED TO AVOID BOW
12. -120 & -150 POSITION PARTS USE C-269-01-X. DO NOT SUB C-126-XX-X.

TABLE 1	
NO OF POSITIONS	COPLANARITY
-030 THRU -090	.004 [.10]
-120 THRU -180	.006 [.15]

UNLESS OTHERWISE SPECIFIED, DIMENSIONS ARE IN INCHES.
TOLERANCES ARE:
DECIMALS: .XX: ±.01 [.25]; .XXX: ±.005 [.13]; .XXXX: ±.0020 [.050]
ANGLES: 2°

PROPRIETARY NOTE
THIS DOCUMENT CONTAINS INFORMATION CONFIDENTIAL AND PROPRIETARY TO SAMTEC, INC. AND SHALL NOT BE REPRODUCED OR TRANSFERRED TO OTHER DOCUMENTS OR DISCLOSED TO OTHERS OR USED FOR ANY PURPOSE OTHER THAN THAT WHICH IT WAS OBTAINED WITHOUT THE EXPRESSED WRITTEN CONSENT OF SAMTEC, INC.

samtec
520 PARK EAST BLVD, NEW ALBANY, IN 47150
PHONE: 812-944-6733 FAX: 812-948-5047
e-Mail: info@SAMTEC.com code: 55322

MATERIAL: DO NOT SCALE DRAWING SHEET SCALE: 1:0.66666
FLAMMABILITY RATING: UL 94V-O
INSULATOR: BLACK LCP
CONTACT: PHOS BRONZE

DESCRIPTION: .5mm DOUBLE ROW SOCKET ASSEMBLY

DWG. NO. BSH-XXX-01-X-D-XX-XX

BY: DEAN P 06/08/1999 SHEET 1 OF 2

F:\DWG\MISC\MKTG\BSH-XXX-01-X-D-XX-XX-MKT.SLDDRW

REVISION V

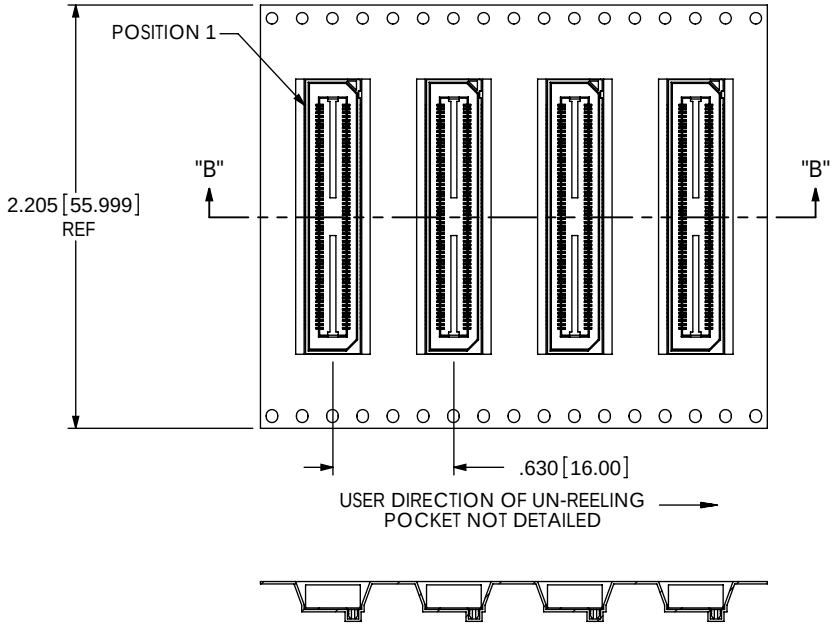

SECTION "B"-"B"
SCALE 1 : 1

TAPE AND REEL PACKAGING VIEW

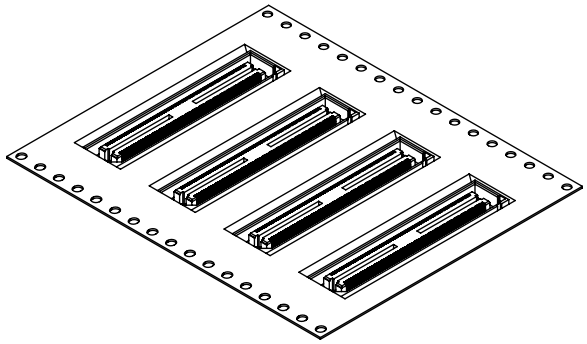

TUBE PACKAGING VIEW
[PARTS TO HAVE POSITION #1 LOADED
IN SAME DIRECTION AS ARROW]

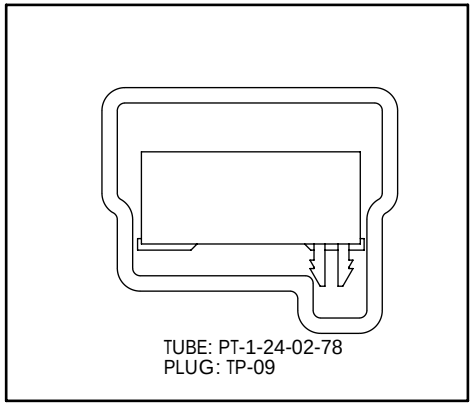

PROPRIETARY NOTE
THIS DOCUMENT CONTAINS INFORMATION CONFIDENTIAL AND PROPRIETARY TO SAMTEC, INC. AND SHALL NOT BE REPRODUCED OR TRANSFERRED TO OTHER DOCUMENTS OR DISCLOSED TO OTHERS OR USED FOR ANY PURPOSE OTHER THAN THAT WHICH IT WAS OBTAINED WITHOUT THE EXPRESSED WRITTEN CONSENT OF SAMTEC, INC.

DO NOT SCALE DRAWING

SHEET SCALE: 1.5:1

samtec
520 PARK EAST BLVD, NEW ALBANY, IN 47150
PHONE: 812-944-6733 FAX: 812-948-5047
e-Mail: info@SAMTEC.com code: 55322

DESCRIPTION: .5mm DOUBLE ROW SOCKET ASSEMBLY

DWG. NO. BSH-XXX-01-X-D-XX-XX

BY: DEAN P 06/08/1999 SHEET 2 OF 2

F:\DWG\MISC\MKTG\BSH-XXX-01-X-D-XX-XX-MKT.SLDDRW