GTO Snubber Capacitors, Oil Impregnated

PART NO.	**GTO 4500-6.0P**	
ART. NO.	**10726**	

NOMINAL RATINGS

Capacitance/Tolerance	CN	6uF ± 5%
Rated voltage	UN	4500V
Rated DC voltage	Udc	3300VDC
Rated RMS voltage	Urms	1400VAC
Peak voltage period.	Us	4500VDC
Peak voltage not period.	Usmax	4900VDC
Voltage raise	du/dt	1200V/us
Rated current	In	160A
Peak current	Is	7200A
Inductance	Ls	< 15nH
Loss factor diel.	tanδ	< 2.0*10^ - 4
Loss factor 50Hz	tanδ	< 2.0*10^ - 4
1kHz	tanδ	< 4.0*10^ - 4

ROUTINE TESTS

Test voltage terminal/terminal	UT/T	7300VDC, 10s

OPERATING TEMPERATURE

Minimum ambient temperature	Ta min	- 25°C
Maximum ambient temperature	Ta max	60°C
Minimum casing temperature	Tc min	- 25°C
Maximum casing temperature	Tc max	70°C

The list below contains our standard program for GTO capacitors with a rated voltage of 4500V. All parameters not mentioned below are in accordance with this data sheet.

Type	C µF	I_s A	Dimensions Ø d x h (mm)	Weight kg
GTO 4500 - 0.25 P	0.25	300	92 x 91	0.59
GTO 4500 - 0.50 P	0.50	600	92 x 91	0.59
GTO 4500 - 1.00 P	1.00	1200	92 x 91	0.59
GTO 4500 - 2.00 P	2.00	2400	92 x 91	0.59
GTO 4500 - 3.00 P	3.00	3600	92 x 141	0.92
GTO 4500 - 4.00 P	4.00	4800	92 x 141	0.92
GTO 4500 - 5.00 P	5.00	6000	92 x 141	0.92
GTO 4500 - 6.00 P	6.00	7200	92 x 161	1.05
GTO 4500 - 7.00 P	7.00	8400	92 x 181	1.18

- Other values upon request.
- Above capacitors types are usually available ex stock.
- All other types have to be manufactured in accordance with specific orders, however certain minimum order quantities may be requested depending on the capacitor type.
- The dimensions may be changed due to technical advances without notice.

STORAGE TEMPERATURE

Minimum temperature	Tmin	- 50°C
Maximum temperature	Tmax	+ 85°C

TECHNOLOGY

Dielectric	Polypropylene film non self-healing
Impregnation	oil, NON PCB

BUSHING

Internal thread	M8 depth 15mm
Air distance	217mm
Creepage distance	217mm

DESIGN DATA

Diameter	91mm
Height	161mm
Drawing	20-B-043
Weight	1.2kg
Casing material	Lathene
Mounting	every position

LIFE EXPECTANCY > 100000 Std

FAILURE RATE 300 FIT

DIMENSIONS

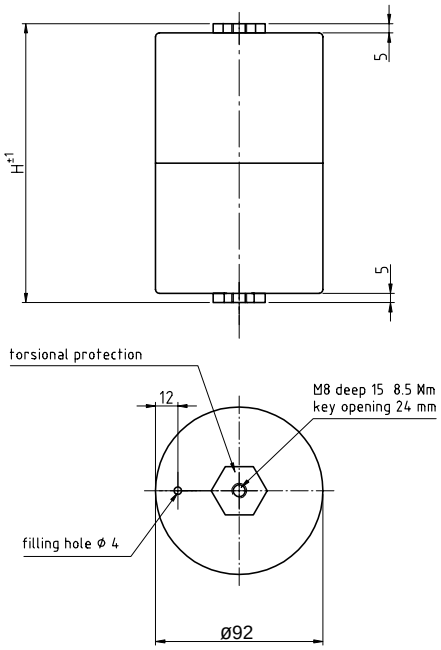

www.vishay.com
www.DataSheet4U.com