FIBOX MNX PC

80 X 130 X 100

FIBOX

This is a sample photo.

Order symbol PC 100/100 LG

El. number **EAN-code** 6418074022035

Sweden

Denmark

Finland 3420307

Including

Enclosure cover with cover screws, body with mounting screws and gasket.

Product Properties

USA: UL Type 1, 4, 4X, 6

EURO: IP 66/67 (EN 60529); IK 08 (EN 50102)

MNX PC

In the corners of these the areas we have radius 2.0 mm in all sizes.
The higher/deeper the cover is, the smaller the recess in the cover.

Cover type	Recessed areas (mm x mm)
II 100 / 10	99x49
II 100 / 25	98x48
II 100 / 50	92x42
II 100 / 75	90x40

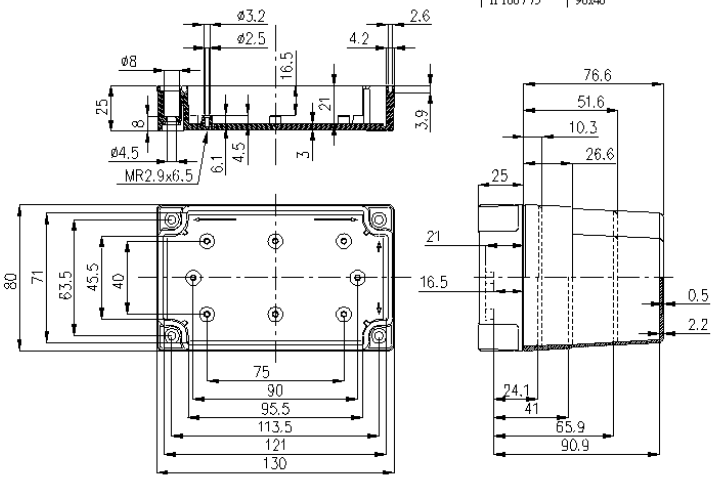

Technical Information of Product Group

Standard colour:	RAL 7035	Temp. range-in cont. use:	Max. +80 °C
Flame resistance:	UL94-5V (UL 746 C 5)	Temp. range-of material:	- 40 °C - + 120 °C

Accessories

Sealing bushing	DP 14553
Condensation water plug	MB 12189
Mounting screw	MR ZN2.9x6.5
Ventilation device	MB 10631
Inspection window	L 02
Cover screw	SS 14551H
Mounting plate	MIV 100
DIN-Rail	MIV 5
DIN-Rail	MIN 10
DIN-Rail	MIN 5
DIN-Rail	MIV 10
Front plate	FP A 100/130
Hinge	TH A

(c) FIBOX Oy Data subject to change without notice.