THIS DRAWING IS UNPUBLISHED. RELEASED FOR PUBLICATION -,- .
© COPYRIGHT - BY TYCO ELECTRONICS CORPORATION. ALL RIGHTS RESERVED.

| LOC | DIST |
|---|---|
| AD | 00 |

REVISIONS

| P | LTR | DESCRIPTION | DATE | DWN | APVD |
|---|---|---|---|---|---|
| | 02 | REVISED PER ECO-07-009714 | 02MAY07 | DH | RP |

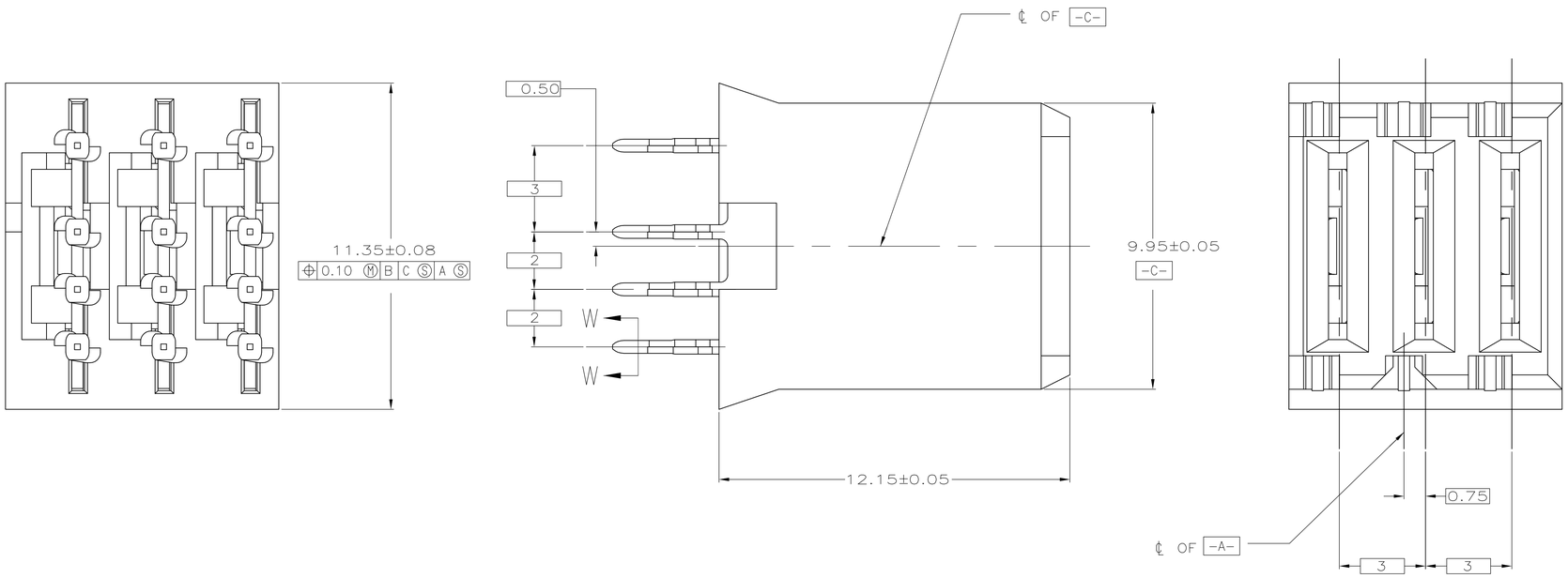


1. MATERIAL: HOUSING: POLYESTER. COLOR: GRAY. 94V-O.
   CONTACT: PHOSPHOR BRONZE.
2. FINISH: CONTACT MATING AREA: 1.27μm MIN GOLD OR 0.08μm MIN GOLD OVER 0.76μm MIN PALLADIUM-NICKEL.
   ACTION PIN AREA: 0.5μm MIN TIN PLATE,
   ALL OVER 1.27μm MIN NICKEL UNDERPLATE.
3. FINISH: CONTACT LUBRICATION WITH BELLCORE APPROVED LUBRICANT. TECHNICAL REFERENCE: TR-NWT-001217 ISSUE 1, SEPT 1992.
4. TOLERANCE TO BE ±0.28 AFTER CONNECTOR IS APPLIED TO P.C. BOARD.
5. RESTRICTED PART NUMBER, CONTACT ENGINEERING.
6. MATERIAL: HOUSING: POLYESTER. COLOR: GRAY. 94V-O.
   CONTACT: HIGH CURRENT COPPER ALLOY
7. REFERENCE APPLICATION SPEC 114-1103 FOR RECOMMENDED PLATED THRU HOLE DIAMETER AND PLATING THICKNESS.
8. CURRENT RATING 10A/CONTACT FOR PHOS BRONZE CONTACTS AND 16A/CONTACT FOR HIGH CURRENT COPPER ALLOY CONTACTS PER PRODUCT SPEC 108-1651.

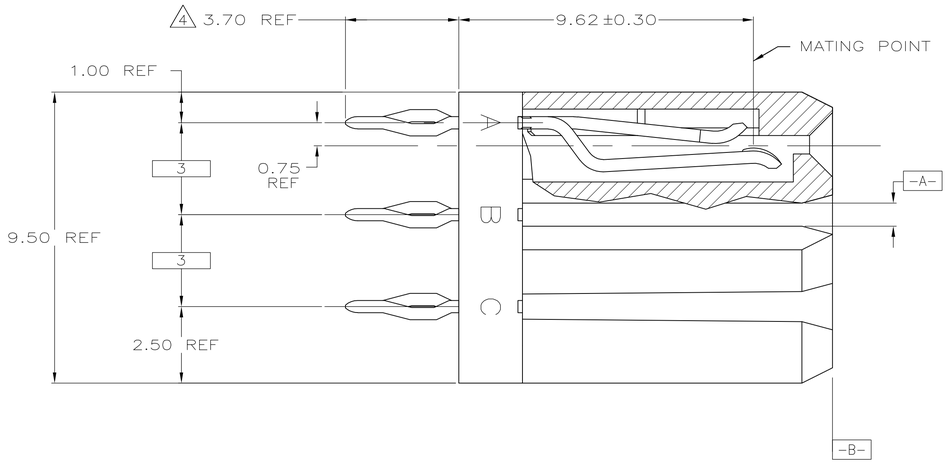


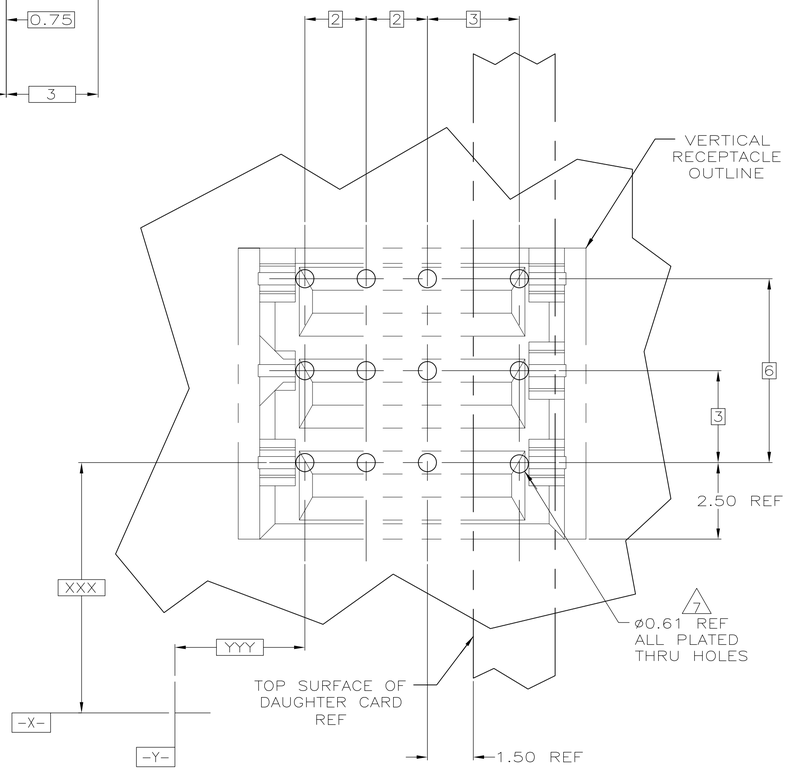


RECOMMENDED PCB HOLE LAYOUT

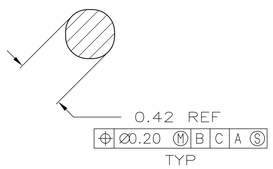


SECTION W-W
SCALE 40:1

| | |
|---|---|
| 2 3 6 | 5-5223955-2 |
| 1 2 3 5 | 5223955-8 |
| 1 2 3 | 5223955-2 |
| MATERIAL & FINISH | PART NUMBER |

THIS DRAWING IS A CONTROLLED DOCUMENT.

DIMENSIONS: mm

TOLERANCES, UNLESS OTHERWISE SPECIFIED:
0 PLC ± -
1 PLC ± -
2 PLC ± 0.13
3 PLC ± -
4 PLC ± -
ANGLES ± -

MATERIAL: SEE TABLE
FINISH: SEE TABLE

DWN B.CARBO 10DEC04
CHK R.PATTERSON 10DEC04
APVD R.PATTERSON 10DEC04
PRODUCT SPEC -
APPLICATION SPEC -
WEIGHT -

tyco Electronics
Tyco Electronics Corporation
Harrisburg, Pa 17105-3608

NAME: ASSEMBLY, VERTICAL RECEPTACLE, UNIVERSAL POWER MODULE
-

| SIZE | CAGE CODE | DRAWING NO | RESTRICTED TO |
|---|---|---|---|
| A1 | 00779 | C-5223955 | - |

CUSTOMER DRAWING | SCALE 10:1 | SHEET 1 OF 1 | REV 02