INTRODUCTION

The S5T5820C is a DTMF/PULSE switchable dialer with a 32-digit redial which can be done using a slide switch. All necessary dual-tone frequencies are derived from a 3.579545 MHz TV crystal or ceramic resonator providing very high accuracy and stability. The required sinusoidal wave form for each individual tone is digitally synthesized on the chip. The generated wave form has very low total harmonic distortion (7% max). A voltage reference is generated on the chip which is stable over the operating voltage and temperature range and regulates the single levels of the dual tone to meet telephone industry specifications. CMOS technology is applied to this device, for very low power requirements high noise immunity, and easy interface to a variety of telephones requiring external components.

18–DIP–300A

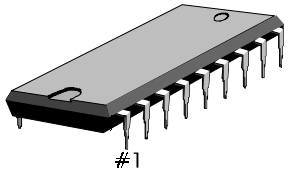

20–SOP–375

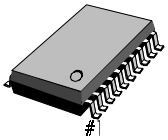

FEATURES

- Tone/Pulse switchable (slide switch)
- 32-digit capacity for redial
- Automatic mix redialing (last number dial)
- PULSE → DTMF with multiple auto access pause
- PABX auto-pause for 3.5 sec.
- 4 X 4 or (2 of 8) keyboard available
- Two key single tone operation
- Operating Voltage : 2.0 to 5.5V
- Numbers dialed manually after redial are cascadable and stored as additional numbers for next redialing
- Uses inexpensive TV crystal or ceramic resonator (3.579545MHz)
- Make/Break ratio (33.3 / 66.6) pin selectable
- Touch key hooking (604ms)
- Low standby current
- Improved EMI characteristics
- Improved redial memory quality

ORDERING INFORMATION

Device	Package	Operating Temperature
S5T5820C03-D0B0	18–DIP–300A	–20°C to + 70°C
S5T5820C03-S0B0	20–SOP–375	

BLOCK DIAGRAM

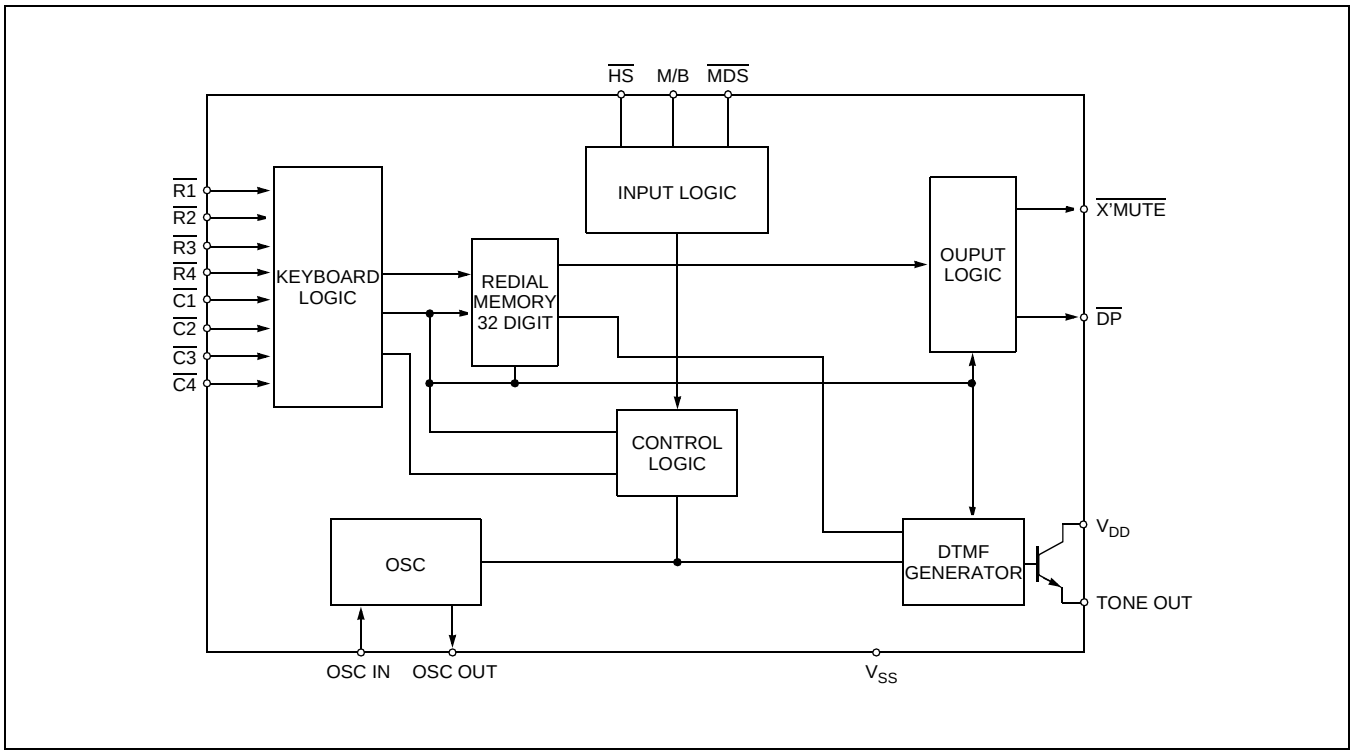

PIN CONFIGURATION

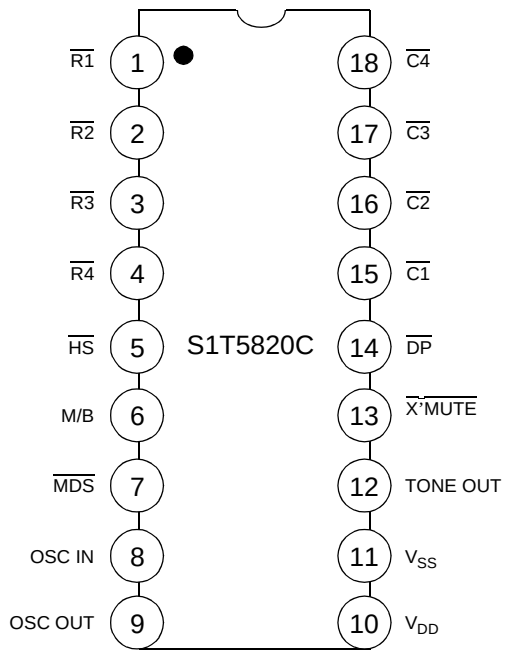

(18 DIP)

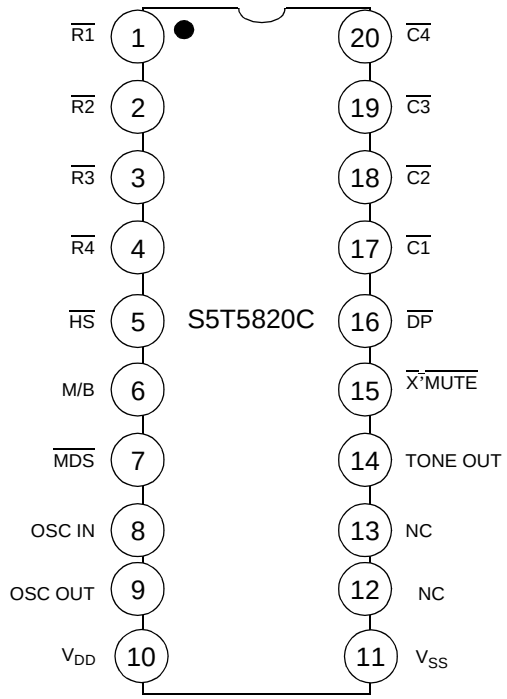

(20 SOP)

ARRANGEMENT OF KEYBOARD

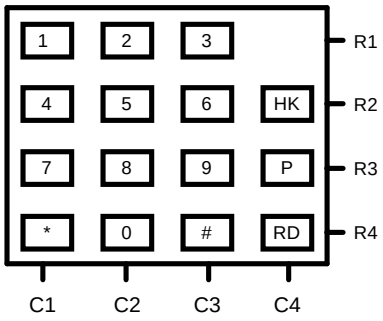

TONE FREQUENCIES

Input	Specified	Actual	% Error
R1	697	699.1	+ 0.31
R2	770	766.2	– 0.49
R3	852	847.4	– 0.54
R4	941	948.0	+ 0.74
C1	1209	1215.7	+ 0.57
C2	1336	1331.7	– 0.32
C3	1477	1471.9	– 0.35

* Keyboard Description

HK	: HOOKING (604ms)
P	: PAUSE (3.5 second)
RD	: REDIAL

PIN DESCRIPTION

<table>
<tr><th>Pin No</th><th>Symbol</th><th>Description</th></tr>
<tr><td>1– 4
15 –18</td><td>$\overline{R1}$ – $\overline{R4}$
$\overline{C1}$ – $\overline{C4}$</td><td>Keyboard ($\overline{R1}$, $\overline{R2}$, $\overline{R3}$, $\overline{R4}$, $\overline{C1}$, $\overline{C2}$, $\overline{C3}$, $\overline{C4}$)
These inputs can be interfaced to an XY matrix keyboard. $\overline{C1}$–$\overline{C4}$ & $\overline{R1}$–$\overline{R4}$ are set to low at On Hook ($\overline{HS}$ = high). $\overline{C1}$– $\overline{C4}$ key inputs are set to low and $\overline{R1}$-$\overline{R4}$ are set to high at OFF HOOK ($\overline{HS}$ = low) which enables the key-input operation. The oscillator starts running when a key-press is detected. Scanning signals are presented at both column and row inputs (Typ: 437Hz) until the input key is released. Key inputs are compatible with standard 2-of-8 form or a single-contact keyboard. Debouncing is provided to avoid false entry (Typ: 4mS).</td></tr>
<tr><td>5</td><td>$\overline{HS}$</td><td>Hook Switch
This input detects the state of the hook switch contact.
Off Hook corresponds to V_{SS} condition. On Hook corresponds to V_{DD} condition.</td></tr>
<tr><td>6</td><td>M/B</td><td>Make/Break Ratio
This input provides the selection of the Make/Break ratio (33.3: 66.6/40:60) when M/B is connected to V_{DD}/V_{SS}.</td></tr>
<tr><td>7</td><td>MDS</td><td>Mode Select Input
Pulse/DTMF mode is selected as shown is the following table. Initial Mode means the state after going Off Hook (HS → V_{SS})
<table>
<tr><th>MDS</th><th>INITAL MODE</th><th>SWITCHING ENTRY MODE</th></tr>
<tr><td>V_{DD}</td><td>Pulse</td><td>$\overline{MDS}$ Input = V_{SS}</td></tr>
<tr><td>V_{SS}</td><td>Tone</td><td>N/A</td></tr>
</table></td></tr>
<tr><td>8 – 9</td><td>OSC IN
OSC OUT</td><td>Oscillator Input/Output
These pins are provided to connect an external 3.58MHz crystal. Oscillator starts (at Off Hook) and is sustained until pulse or DTMF signals are finished.</td></tr>
<tr><td>10 – 11</td><td>V_{DD}, V_{SS}</td><td>Power supply inputs.
The device is designed to be operated on 2.0V to 5.5V</td></tr>
<tr><td>12</td><td>TONE OUT</td><td>DTMF Signal Output
When a valid keypress is detected in DTMF mode, appropriate low and high group frequencies are generated which hybrid the Dual Tone Output. Tone out is Off State in pulse mode.</td></tr>
<tr><td>13</td><td>$\overline{X'MUTE}$</td><td>$\overline{X'MUTE}$ Output
<table>
<tr><th>HS</th><th>X'MUTE Output</th></tr>
<tr><td>V_{DD}</td><td>ON</td></tr>
<tr><td>V_{SS}</td><td>Normally OFF ON during pulse and DTMF dialing</td></tr>
</table>
(N channel open drain)</td></tr>
<tr><td>14</td><td>DP</td><td>Dial Pulse Out
DP : The normal output will be ON during break and OFF during make at OFF HOOK. The output will be OFF at ON HOOK.</td></tr>
</table>

ABSOLUTE MAXIMUM RATINGS

Characteristic	Symbol	Value	Unit
Supply Voltage	V_{DD}	6.0	V
Input Voltage	V_I	V_{SS} - 0.3, V_{DD} + 0.3	V
Output Voltage	V_O	V_{SS} - 0.3, V_{DD} + 0.3	V
Output Voltage	$V_{O\ (DXM)}$	≤ V_{DD} ($\overline{DP}$, $\overline{X'MUTE}$, $\overline{MUTE}$)	V
Tone Output Current	$I_{O\ (TONE)}$	50	mA
Power Dissipation	P_D	500	mW
Operating Temperature	T_{OPR}	– 20 to + 70	°C
Storage Temperature	T_{STG}	– 40 to + 125	°C

ELECTRICAL CHARACTERISTICS

(V_{SS} = 0V, V_{DD} = 3.5V, f_{XTAL} = 3.579545MHz, Ta = 25°C, unless otherwise specified)

Characteristic	Symbol	Test Conditions			Min.	Typ.	Max.	Unit
Operating Voltage Range	V_{DD}	–			2.0	–	5.5	V
Memory Retention Voltage	V_{MR}	–			1.0	–	–	V
Memory Retention Current	I_{MR}	HS = V_{DD} = 1.0V			–	0.05	0.1	µA
Operating Current	$I_{DD\ (PULSE)}$	MDS = V_{DD}	One selected HS = Vss, All outputs unloaded		–	0.1	0.3	mA
	$I_{DD\ (TONE)}$	MDS = V_{SS}			–	0.4	0.7	
Standby Current	I_{SB}	HS = V_{SS}	No key selected. all outputs unloaded		–	10	50	µA
Output Current	I_{OL1}	DP,		V_{DD} = 3.5V	1.7	5.0	–	mA
	I_{OL2}	X'MUTE		V_{DD} = 2.5V	0.5	1.5	–	
Input Voltage	V_{IH}	R1-R4, C1-C3, HS, M/B			0.8V_{DD}	–	V_{DD}	V
	V_{IL}	MDS			V_{SS}	–	0.2V_{DD}	
Input Current	I_{L1}	V_{DD} = 3.5V, V_{IN} = 0V		$\overline{R1}$ - $\overline{R4}$	–	–	50	µA
	I_{L2}	V_{DD} = 2.5V, V_{IN} = 0V			–	–	30	
Valid Key Entry Time	t_{KD}	–			–	23	–	mS
Key Release Time	t_{KR}	–			–	5	–	mS
Tone Duration	t_{TD}	–			–	110	–	mS
Tone Interdigit Pause Time	t_{TIDP}	–			–	110	–	mS
Column and Row Scanning Frequency	f_{CR}	–			–	437	–	Hz
Auto Access Pause Time	t_{AP}	–			–	3.5	–	sec
Tone Output	$V_{D(TONE)}$	ROW TONE ONLY	V_{DD} = 2.5V, R_L = 5kΩ		–14.0	–	–12.0	dBV
			V_{DD} = 3.5V, R_L = 5kΩ		–14.0	–	–12.0	
Ratio of Column to Row Tone	dB_{CR}	V_{DD} = 3.5V			1.0	2.0	3.0	dB
Distortion	THD	V_{DD} = 3.5V			–	–	7	%
Tone Output Delay Time	$t_{D(TONE)}$	–			–	1.5	–	mS

APPLICATION INFORMATION

KEYBOARD OPERATION

Single Mode Operation

- Pulse Mode Operation

Off Hook	D1	.....	Dn

The pulse mode is defined by the initial mode after going off Hook and latched at ***D1*** key entry.
This is the condition under ***MDS*** = V_{DD}.

- Tone Mode Operation

Off Hook	D1	.....	Dn

The tone mode is defined by the initial mode after going off Hook and latched at ***D1*** key entry.
This is the condition under ***MDS*** = V_{SS}.

- Manual Dialing with Automatic Access Pause

Off Hook	D	P	D1	.....	Dn

Multiple Pause key entries can be accepted and stored in the redial memory, each as a digit. Each ***P*** key provides 3.5 seconds pause time, but the P key entry as the first digit after going Off Hook is ignored. The ******* key can also be used as a pause key in the pulse mode.
Pause (2) can be cancelled with the ***P*** or ***RD*** key during pause time in redialing.
D = Any numeric key.

- Redialing

Off Hook	RD

Up to 32 digits can be dialed with the ***RD*** key.
The ***RD*** key is disabled while pulse or DTMF signals are transmitted.
When more than 32 digits are stored, redial is also inhibited.
The # key can be used as the ***RD*** key in the pulse mode.

- Inhibiting Redial

Off Hook	D1	.....	Dn	RD	RD

Redial can be inhibited by pressing the ***RD*** key twice after DTMF or pulse signals are transmitted.

PULSE/TONE SWITCHABLE OPERATION

- Mode Switching by MDS Input

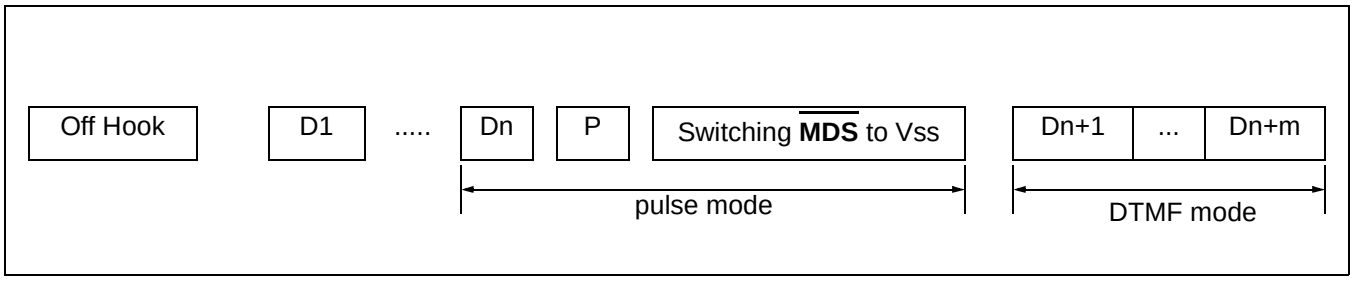

The pulse mode is initially defined $\overline{\mathbf{MDS}}$ = V_{DD}. Mode switching to the DTMF mode can be accepted by MDS = V_{SS}. The DTMF mode will be set up after the pulse mode is finished. In this mode, digits Dn + 1 ... Dn + m are transmitted from Tone Out as DTMF signals by pressing the corresponding keys.
If no P key is contained serially before or after mode switching, the following condition is obtained.

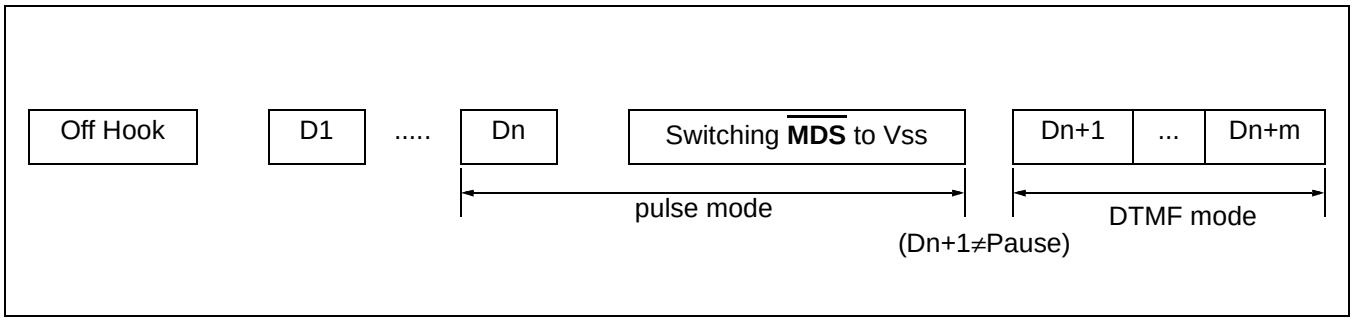

If digit ***Dn+1*** is depressed after the pulse mode is finished, the DTMF mode will be set up after last the pulse signal (***Dn***) is generated. In this mode,digits ***Dn+1*** ... ***Dn+m*** are transmitted from Tone Out as DTMF signals by pressing the corresponding keys. If digit ***Dn+1*** is pressed during dialing pulse signals.
What happens? When the DTMF mode is set, the Hold State will be set after last pulse signal Dn is finished. $\overline{\mathbf{MDO}}$ will flash to indicate this Hold State, ***Dn+1*** ... ***Dn+m*** are stored in redial memory as DTMF DATA and not transmitted from Tone Out. When it is ready to transmit DTMF data in redial memory, the ***RD*** or ***P*** key is pressed to reset this Hold State and ***Dn+1*** ... ***Dn+m*** data are serially transmitted.

TONE MODE TIMING ($\overline{MDS}$ = V_{SS})

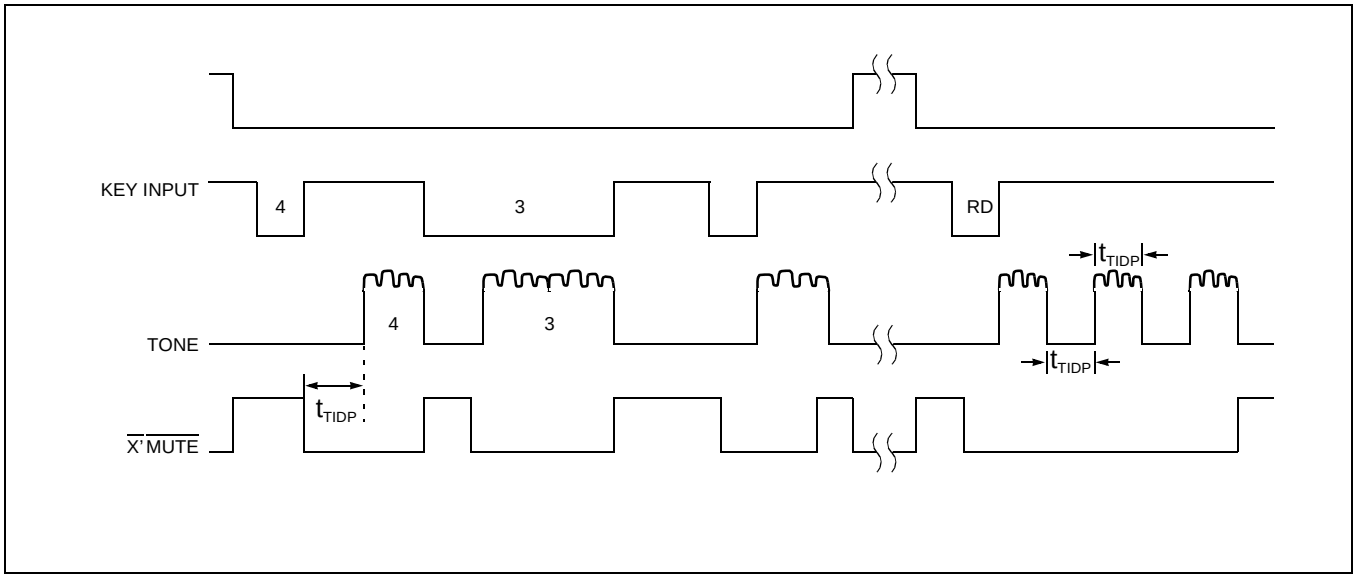

PULSE MODE TIMING ($\overline{MDS}$ = V_{DD})

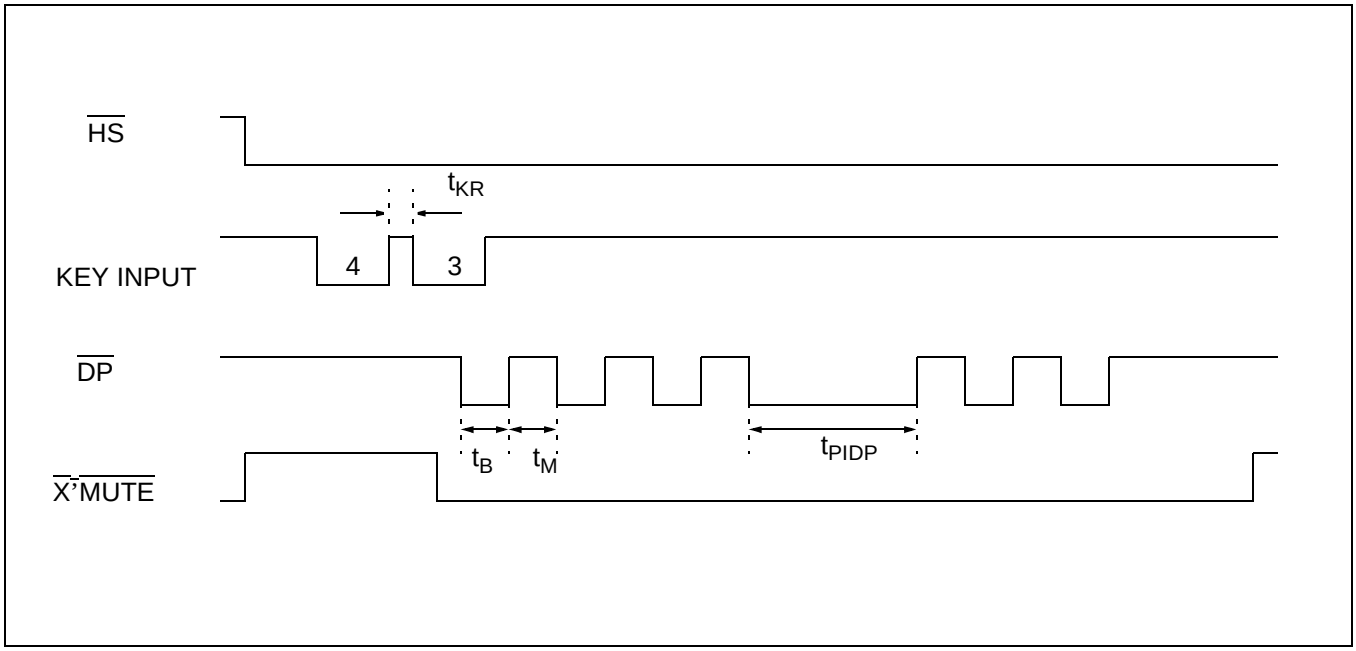

TIMING DIAGRAM (for Switching Mode Operation by MDS Input)