KYCON, Inc. 1810 Little Orchard Street, San Jose, CA 95125 (408)494-0330

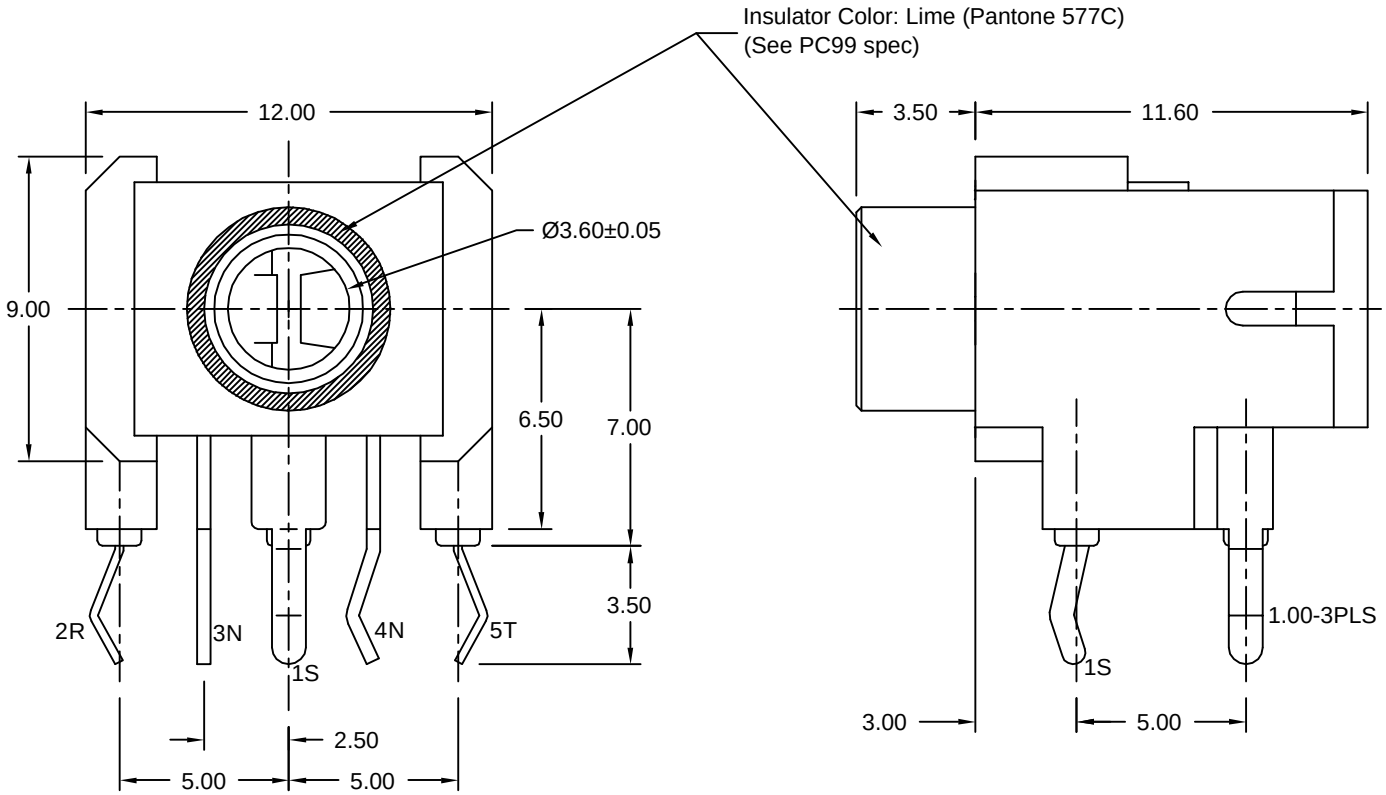

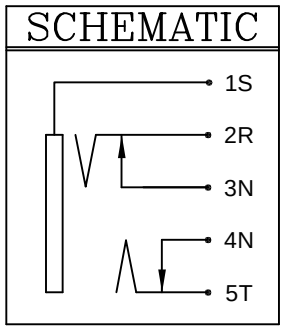

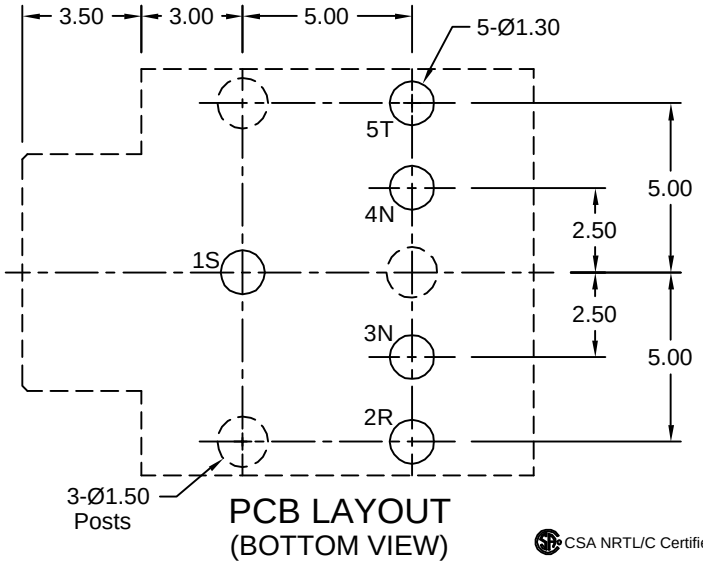

PCB LAYOUT
(BOTTOM VIEW)

CSA NRTL/C Certified File No. LR78160

Materials and Finish

Housing: PBT Thermoplastic
15% Glass Filled,
UL 94V-0 Rated,
Ring: Lime Color,
Pantone 577C
Body: Black Color

Terminals: Copper Alloy,
100u" Tin over
70u" Copper Underplating

Mechanical Characteristics

Insertion Force:
0.4kg - 3.0kg

Extraction Force:
0.3kg - 3.0kg

Durability: 5000 mating cycles

Electrical Characteristics

Contact Resistance:
Before Test: 50 milliohms Max.
After Durability Test:
100 milliohms Max.

Insulation Resistance:
More than 100 Megohms
at 500V DC

Dielectric Withstanding Voltage:
500V AC RMS for 1 minute

Operating Temp:
-25°C to +85°C

Tolerances
X.X ±0.2 X.XX ±0.1 ANG. ±2° Unless Stated Otherwise

REVISION	DATE	DESCRIPTION	DRAWN BY	DESIGNED BY	UNITS
A1	6/24/99	New Drawing	K. Wallace		mm
A2	10/19/00	Ref ECO 99-179	REVISED BY	APPROVED BY	DATE
A3	4/8/02	Ref ECO 01-128	C. Leiva		6/24/99

ST-3200-5NB-577C

High Profile Stereo Jack, 5 pos., PC99

Metal Bushing, Nonthreaded, with Backplate

KYCON