Pomona®

Model 2417
Size B Aluminum Box With Cover

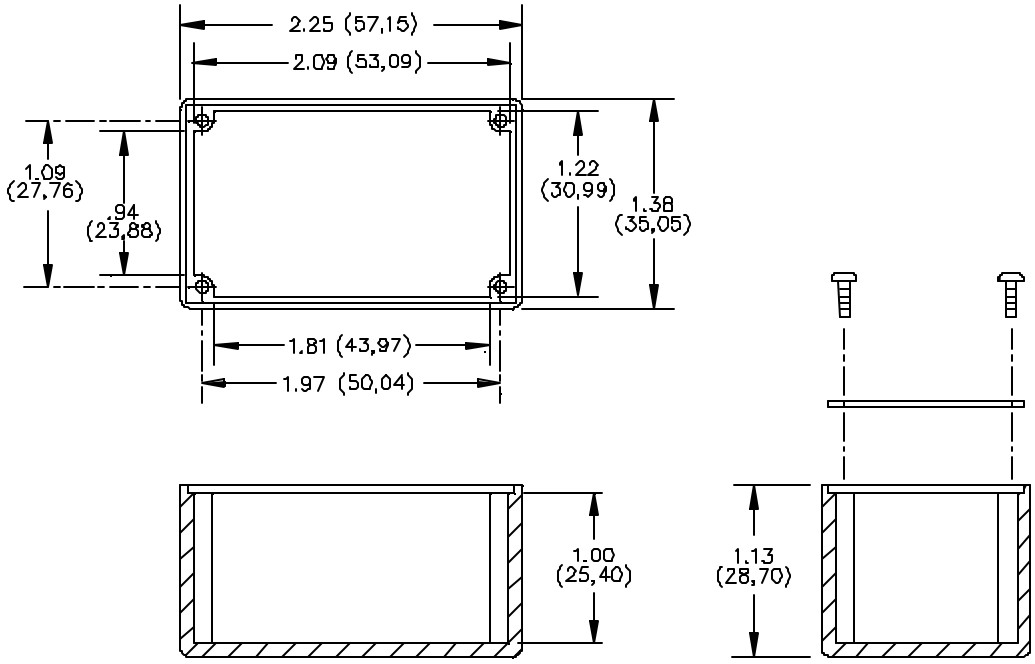

MATERIALS:

Screws: 4 each #2-32 X ¼" pan head self tapping, steel

Cover: .04 (1.02) Thick aluminum alloy 1100-H14 per, clear anodized per

Shielded Housing: Die cast aluminum alloy A380 or A384., Blue paint per Fed. Std. 595, Color No. 25109.

ORDERING INFORMATION: Model 2417

All dimensions are in inches. Tolerances (except noted): .xx = ±.02" (,51 mm), .xxx = ± .005" (,127 mm).
All specifications are to the latest revisions. Specifications are subject to change without notice.
Registered trademarks are the property of their respective companies. Made in USA

Sales: 800-490-2361 Fax: 888-403-3360
Technical Assistance: 800-241-2060

Pomona*ACCESS* **90151** (800) 444-6785 or (425) 446-6010
More drawings available at www.pomonaelectronics.com